The KATRIN experiment

direct ν–mass measurement with sub-eV sensitivity

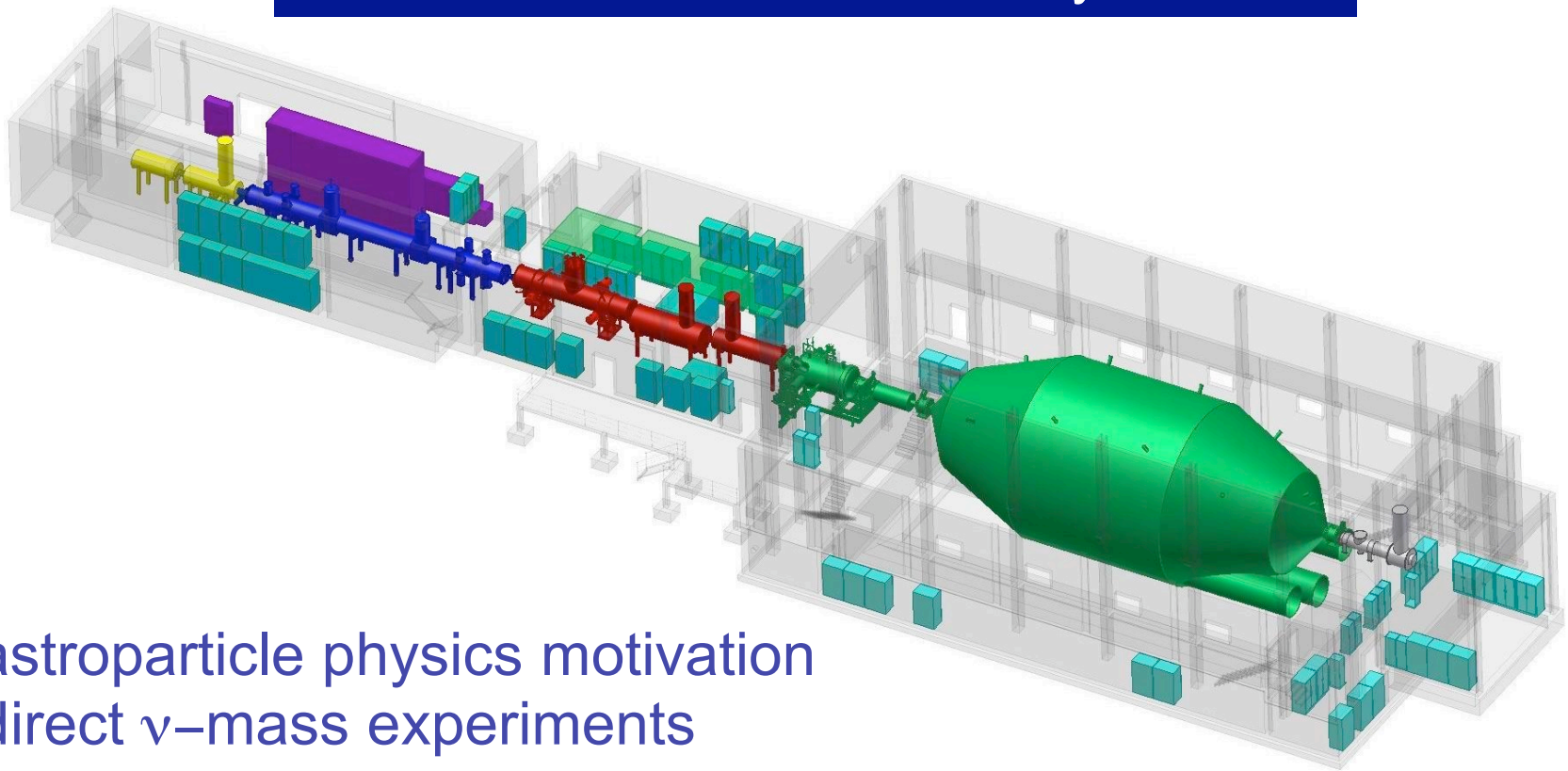

- astroparticle physics motivation
- direct ν–mass experiments
- KATRIN components: source & spectrometers
- sensitivity & outlook

ν–masses in astroparticle physics

cosmology: role of ν–HDM in the evolution of LSS?

particle physics: origin of ν–mass, mass pattern?

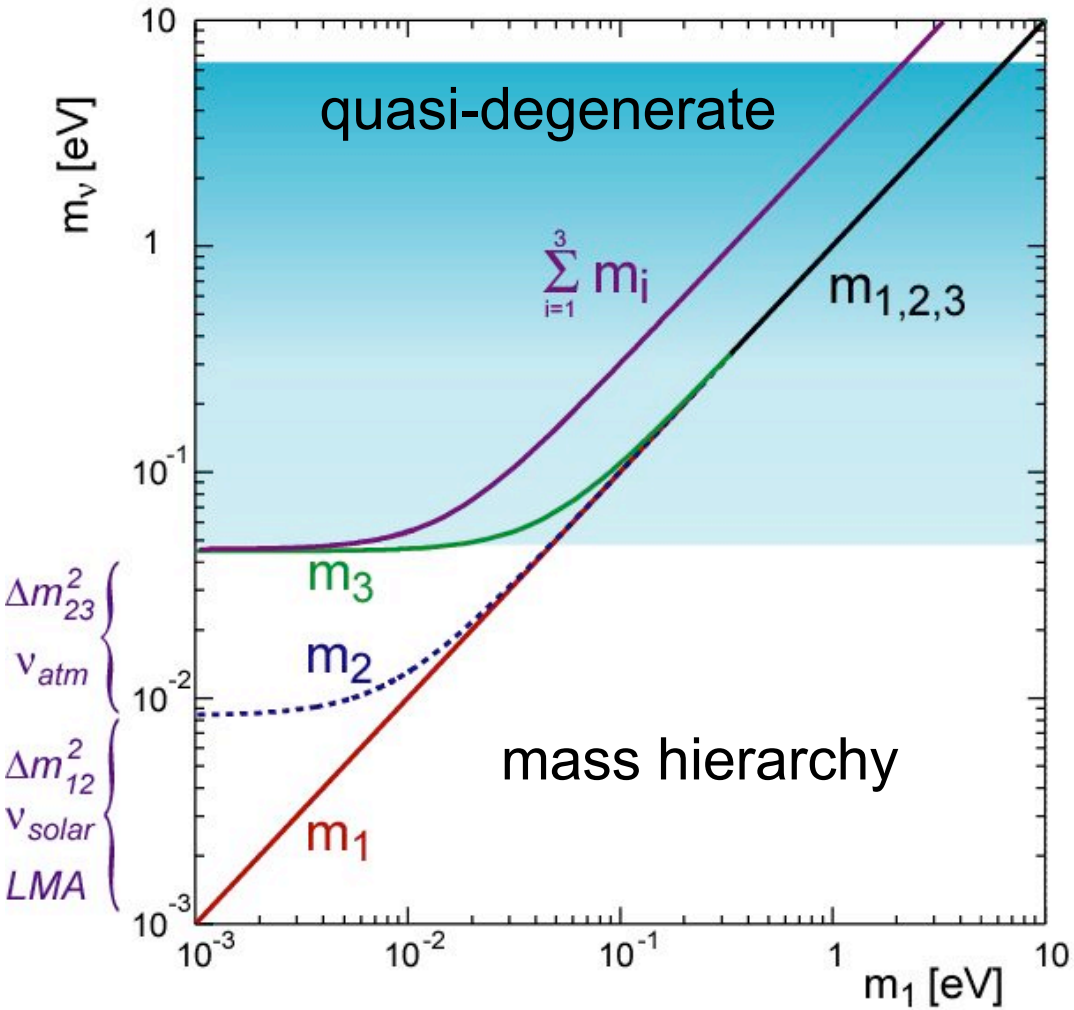

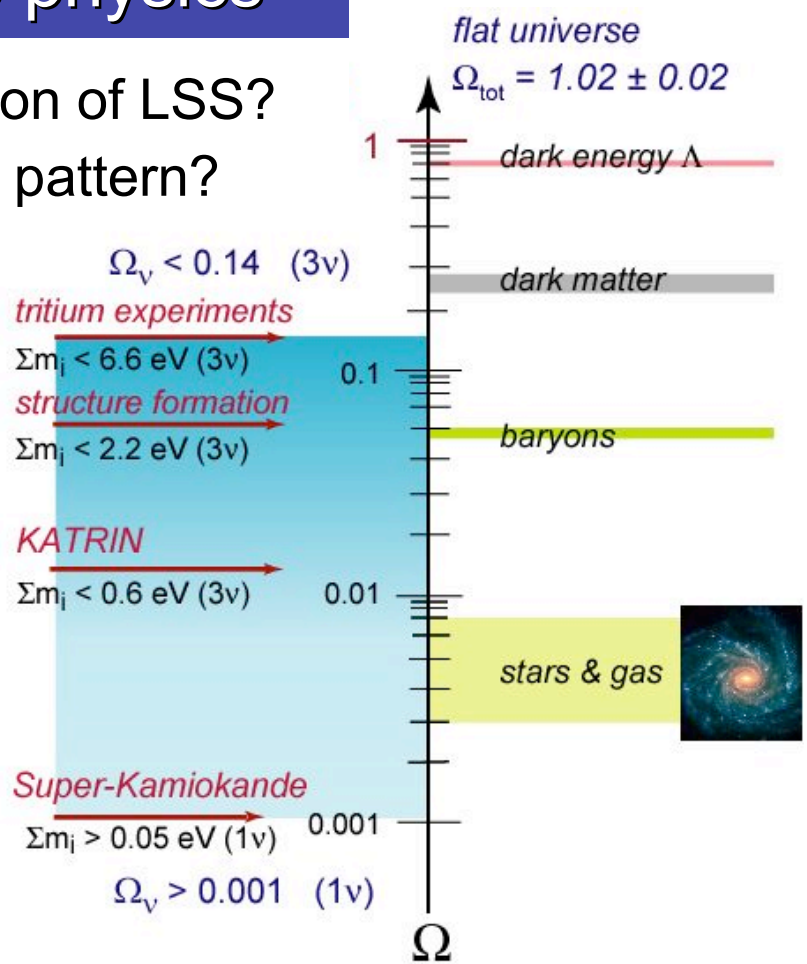

$$\Omega_\nu h^2 = \Sigma m_\nu / 93.5 \text{ eV}$$

non-accelerator roads to ν–masses

ß-decay: absolute ν-mass

model independent, kinematics
status : m_ν < 2.3 eV
potential : m_ν < 200 meV
EU&US: KATRIN

0νßß-decay: eff. Majorana mass

ν-nature (CP), peak at E_0
status : m_ν < 0.35 eV
potential : m_ν < 30 meV
US: Majorana,EXO, EU: Cuore,Gerda

$m_ß$

laboratory

m_{ee}

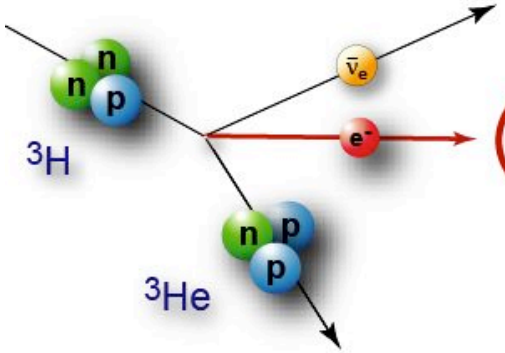

neutrino mass measurements

status 2006 & potential 2016

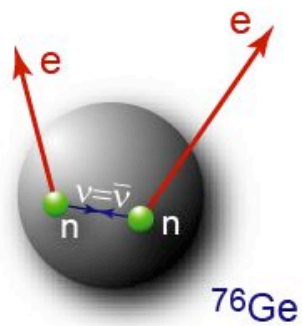

Σm_i

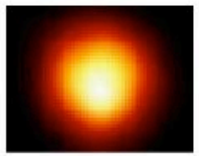

SN20xx

cosmology: ν hot dark matter Ω_ν

model dependent, analysis of LSS data
status : m_ν < 0.7 eV
potential : m_ν < 70 meV
US: WMAP, SDSS, LSST, EU: Planck

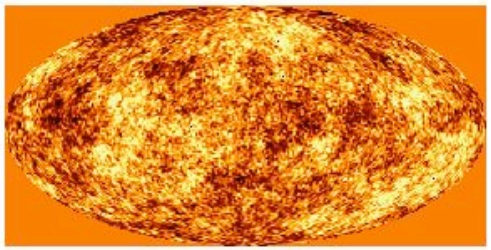

CMBR

ß-decay and neutrino mass

model independent neutrino mass from ß-decay kinematics

$$\frac{d\Gamma_i}{dE} = C\,p\,(E+m_e)\,(E_0-E)\sqrt{(E_0-E)^2-m_i^2}\,F(E)\,\theta(E_0-E-m_i)$$

$$C = G_F^2\frac{m_e^5}{2\,\pi^3}\cos^2\theta_C\,|M|^2$$

experimental observable is m_ν^2

E_0 = 18.6 keV
$T_{1/2}$ = 12.3 y

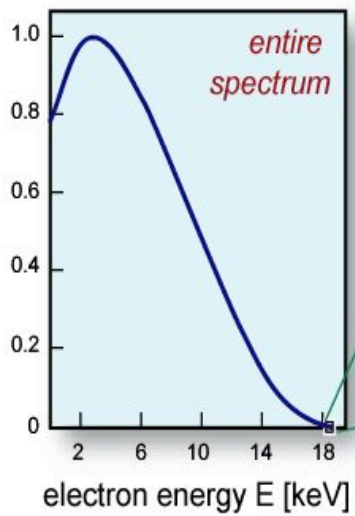

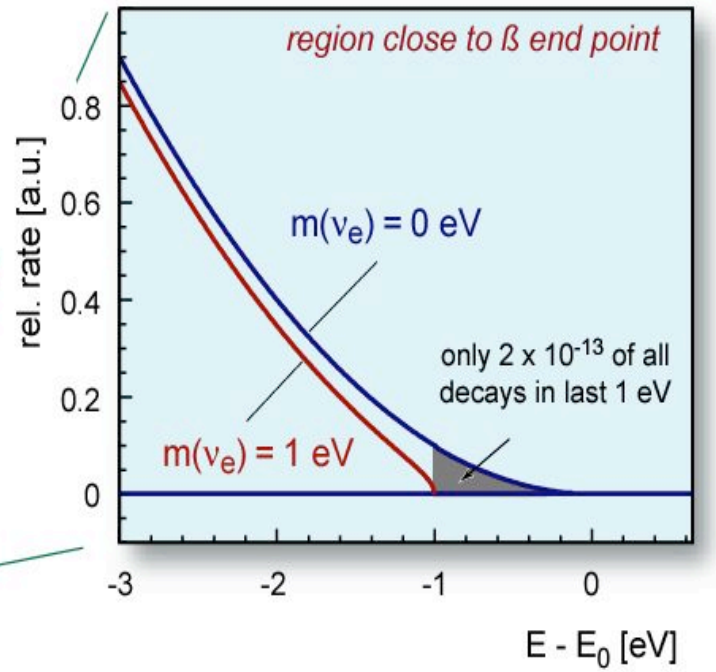

ß-source requirements :

- high ß-decay rate (short $t_{1/2}$)
- low ß-endpoint energy E_0
- superallowed ß-transition
- few inelastic scatters of ß's

ß-detection requirements :

- high resolution (ΔE< few eV)
- large solid angle ($\Delta\Omega \sim 2\pi$)
- low background

history of tritium ß-decay results

	m_ν
ITEP *T_2 in complex molecule* *magn. spectrometer (Tret'yakov)*	17-40 eV
Los Alamos *gaseous T_2 - source* *magn. spectrometer (Tret'yakov)*	< 9.3 eV
Tokio *T - source* *magn. spectrometer (Tret'yakov)*	< 13.1 eV
Livermore *gaseous T_2 - source* *magn. spectrometer (Tret'yakov)*	< 7.0 eV
Zürich *T_2 - source impl. on carrier* *magn. spectrometer (Tret'yakov)*	< 11.7 eV
Troitsk (1994-today) *gaseous T_2 - source* *electrostat. spectrometer*	< 2.05 eV
Mainz (1994-today) *frozen T_2 - source* *electrostat. spectrometer*	< 2.3 eV

Tret´yakov

$\Delta p/p = 7 \times 10^{-4}$

$d\Omega = 10^{-3}$

magnetic guiding field: analysis of momentum

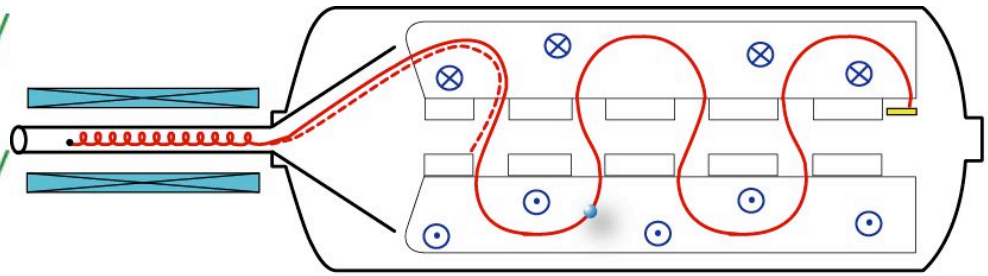

U_0

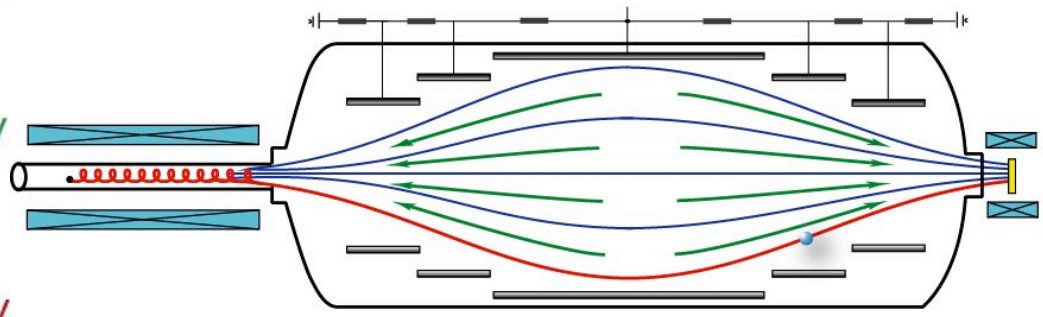

MAC-E

$\Delta E/E = 1 \times 10^{-5}$

$d\Omega \approx 2\pi$

magnetic guiding & electric retarding field

history of tritium ß-decay results

	m_ν
ITEP *T_2 in complex molecule* *magn. spectrometer (Tret'yakov)*	17-40 eV
Los Alamos *gaseous T_2 - source* *magn. spectrometer (Tret'yakov)*	< 9.3 eV
Tokio *T - source* *magn. spectrometer (Tret'yakov)*	< 13.1 eV
Livermore *gaseous T_2 - source* *magn. spectrometer (Tret'yakov)*	< 7.0 eV
Zürich *T_2 - source impl. on carrier* *magn. spectrometer (Tret'yakov)*	< 11.7 eV
Troitsk (1994-today) *gaseous T_2 - source* *electrostat. spectrometer*	< 2.05 eV
Mainz (1994-today) *frozen T_2 - source* *electrostat. spectrometer*	< 2.3 eV

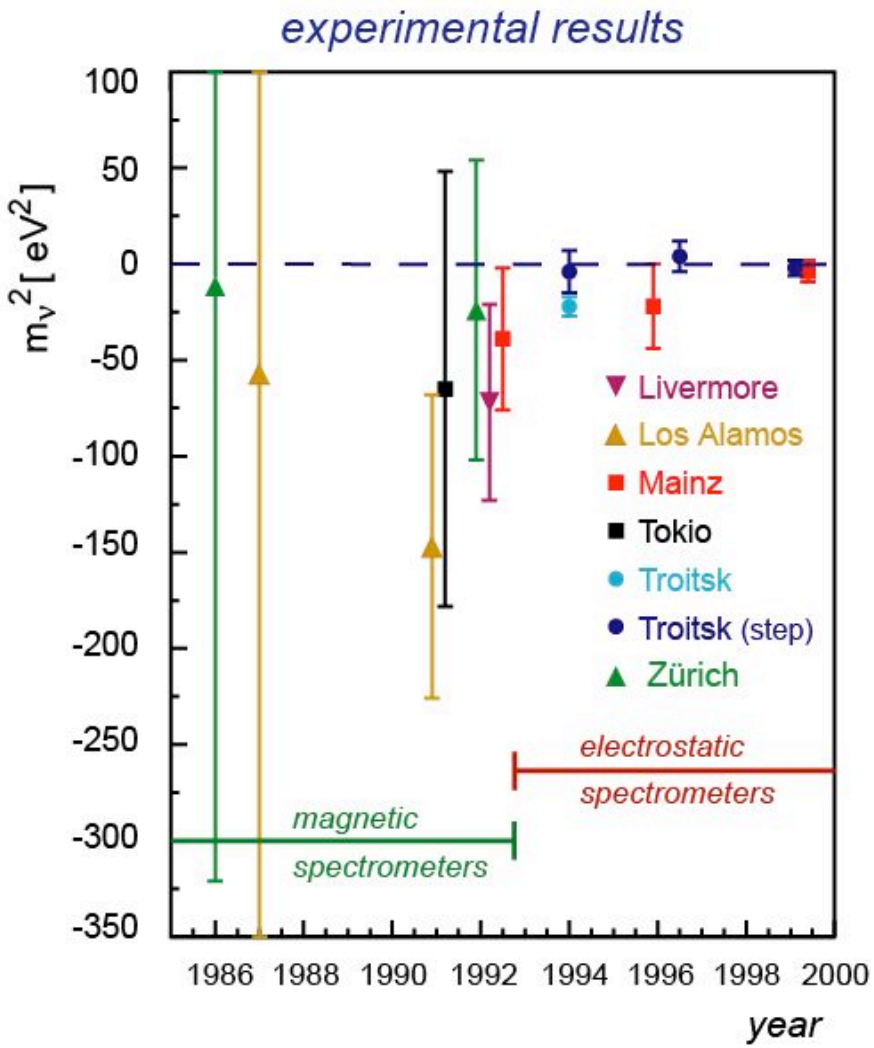

Status of previous tritium experiments

Mainz & Troitsk have reached their intrinsic limit of sensitivity

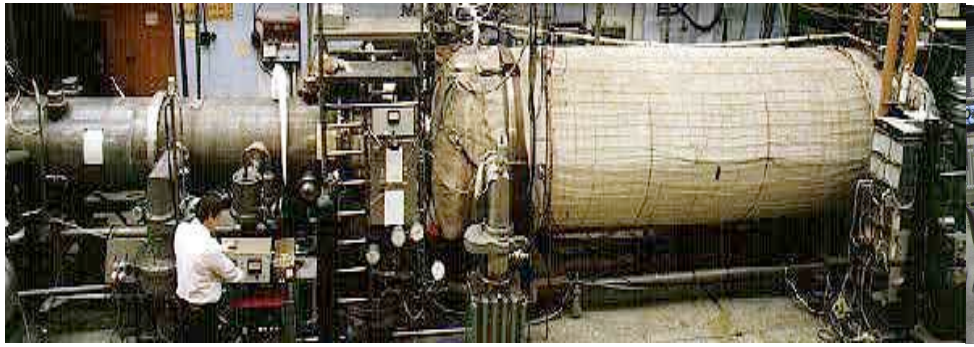

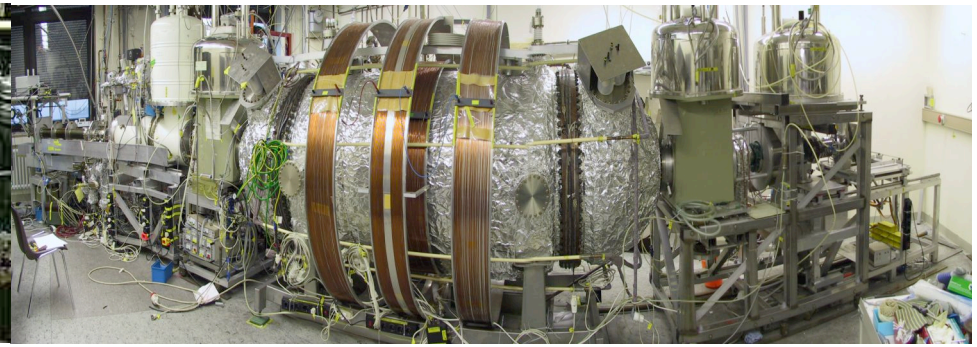

Troitsk

windowless gaseous T_2 source

analysis 1994 to 1999, 2001

$m_\nu^2 = -2.3 \pm 2.5 \pm 2.0\ eV^2$

$m_\nu \leq 2.2\ eV$ (95% CL.)

Mainz

quench condensed solid T_2 source

analysis 1998/99, 2001/02

$m_\nu^2 = -1.2 \pm 2.2 \pm 2.1\ eV^2$

$m_\nu \leq 2.2\ eV$ (95% CL.)

both experiments now used for systematic investigations

KATRIN experiment

Karlsruhe **Tri**tium **N**eutrino Experiment

at Forschungszentrum Karlsruhe

unique facility for closed T_2 cycle:

Tritium Laboratory Karlsruhe

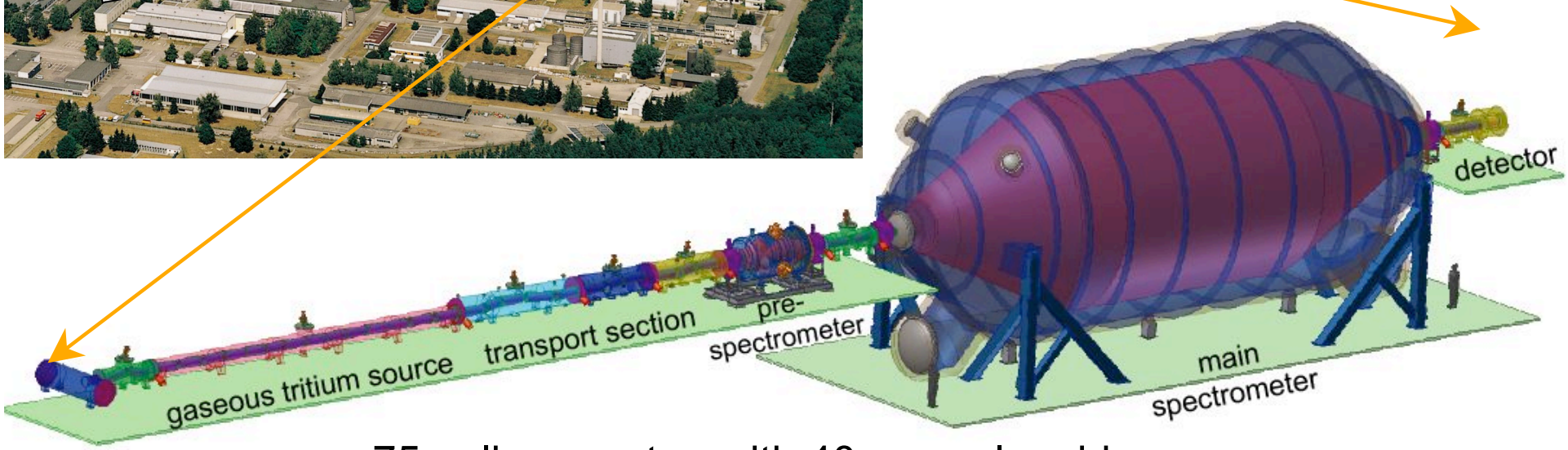

~ 75 m linear setup with 40 s.c. solenoids

designing a next-generation experiment

experimental observable in ß-decay is m_ν^2

aim : improve m_ν by one order of magnitude (2 eV $\rightarrow$ 0.2 eV)

requires : improve m_ν^2 by two orders of magnitude (4 eV^2 $\rightarrow$ 0.04 eV^2)

problem : count rate close to ß-end point drops very fast ($\sim\delta E^3$)

tritium bearing components - overview

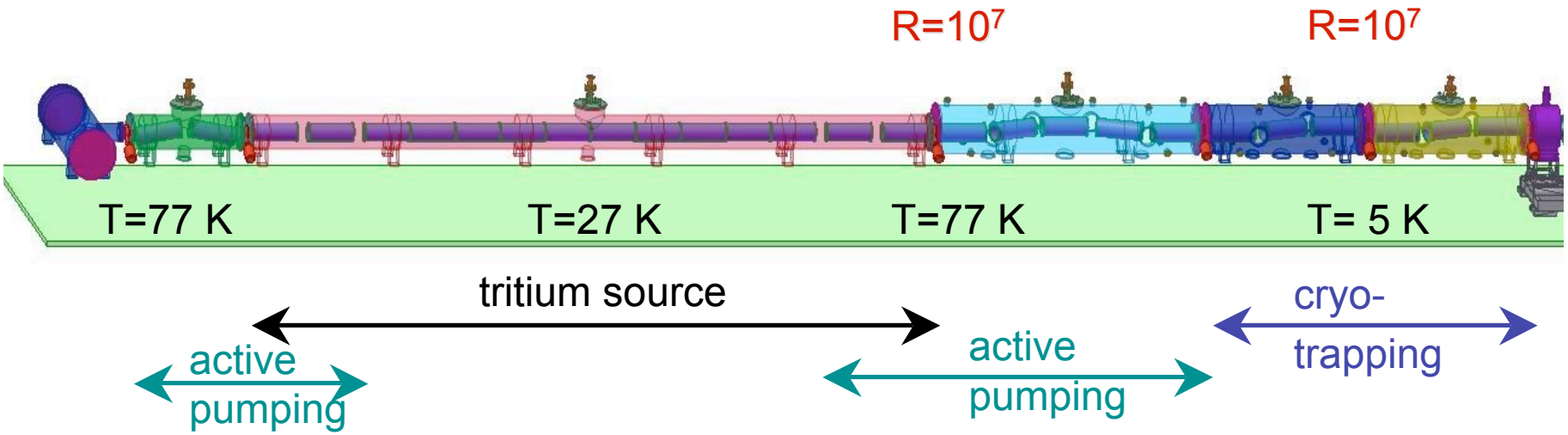

windowless tritium source- design

molecular gaseous ß-decay source, maximum luminosity (10^{11} ß/s)

- integral design criterium: column density $\rho d = 5 \times 10^{17}$ molecules / cm^2

precision: ± 0.1%

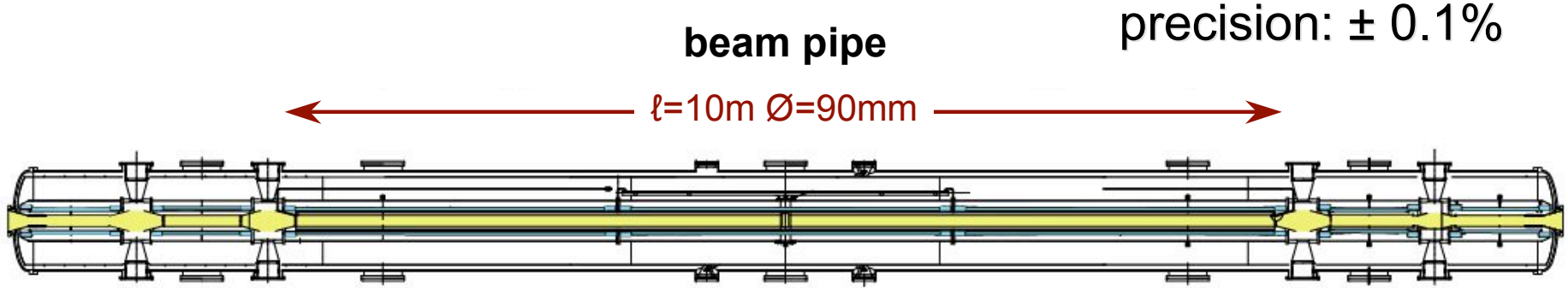

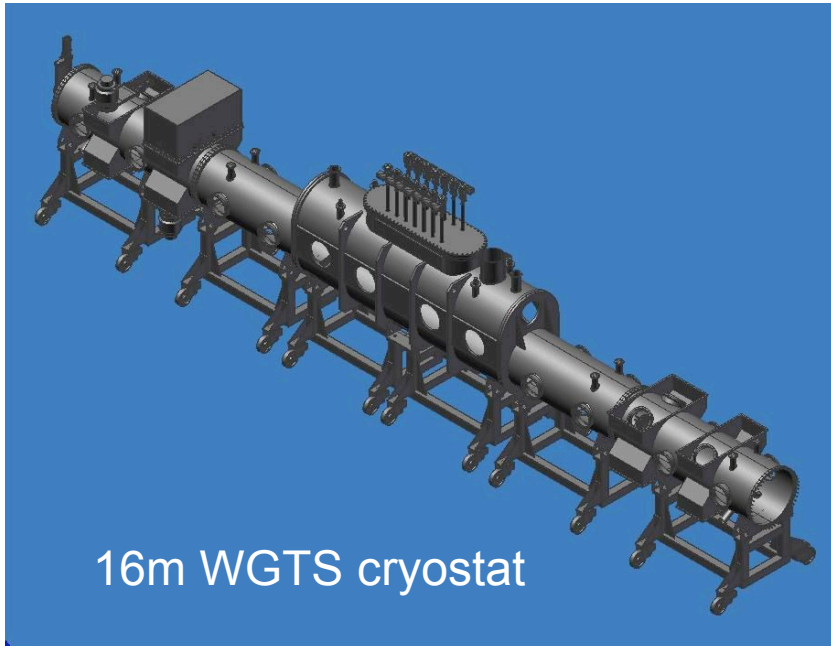

single design criteria:

- magnetic field B = 3.6 T (±2%)
- tritium injection 5×10^{19} mol/s =
  4.7 Ci/s = 1.7×10^{11} Bq/s
  = 40 g tritium / day
- temperature T = 27-30K $\Delta T \leq 30$ mK
- pumping speed 12.000 ℓ / s

WGTS – tritium pressure

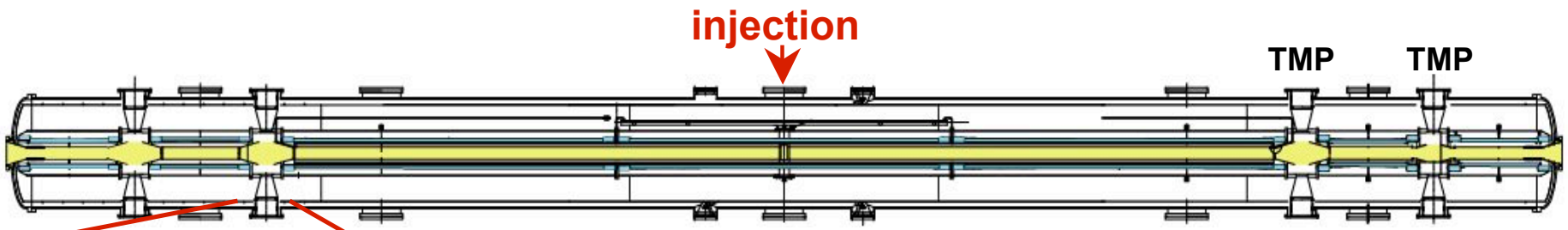

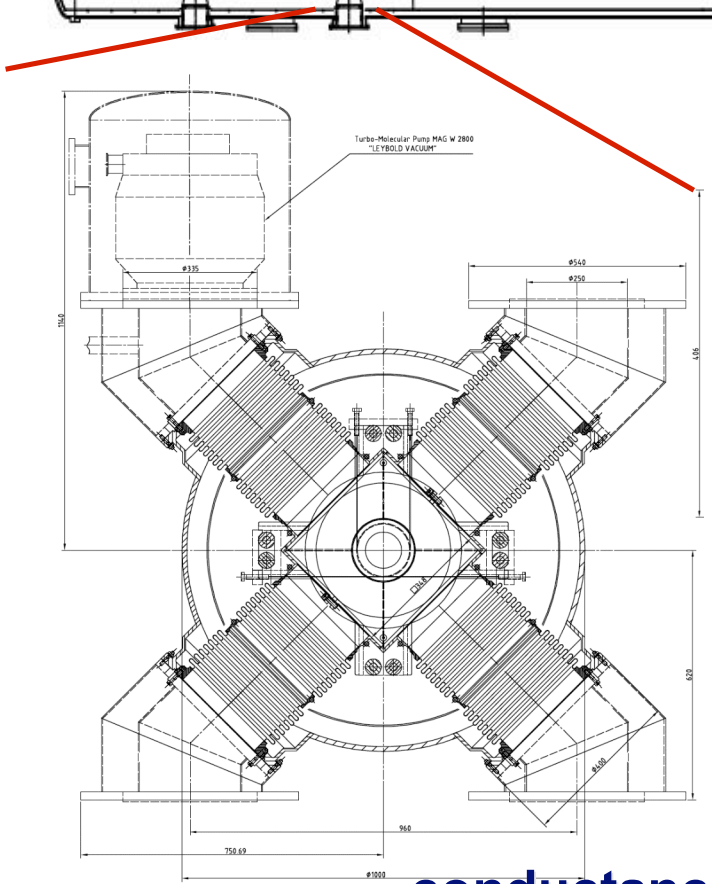

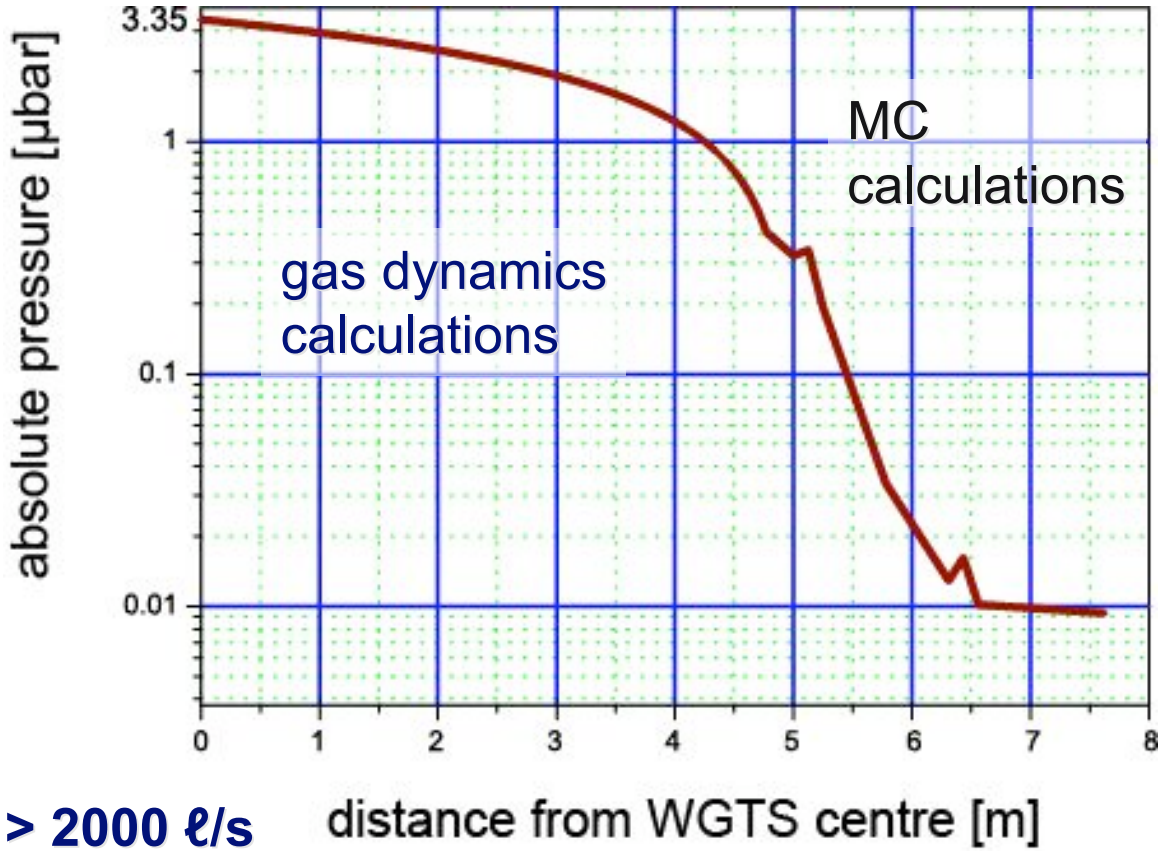

conductance > 2000 ℓ/s

WGTS – magnetic field

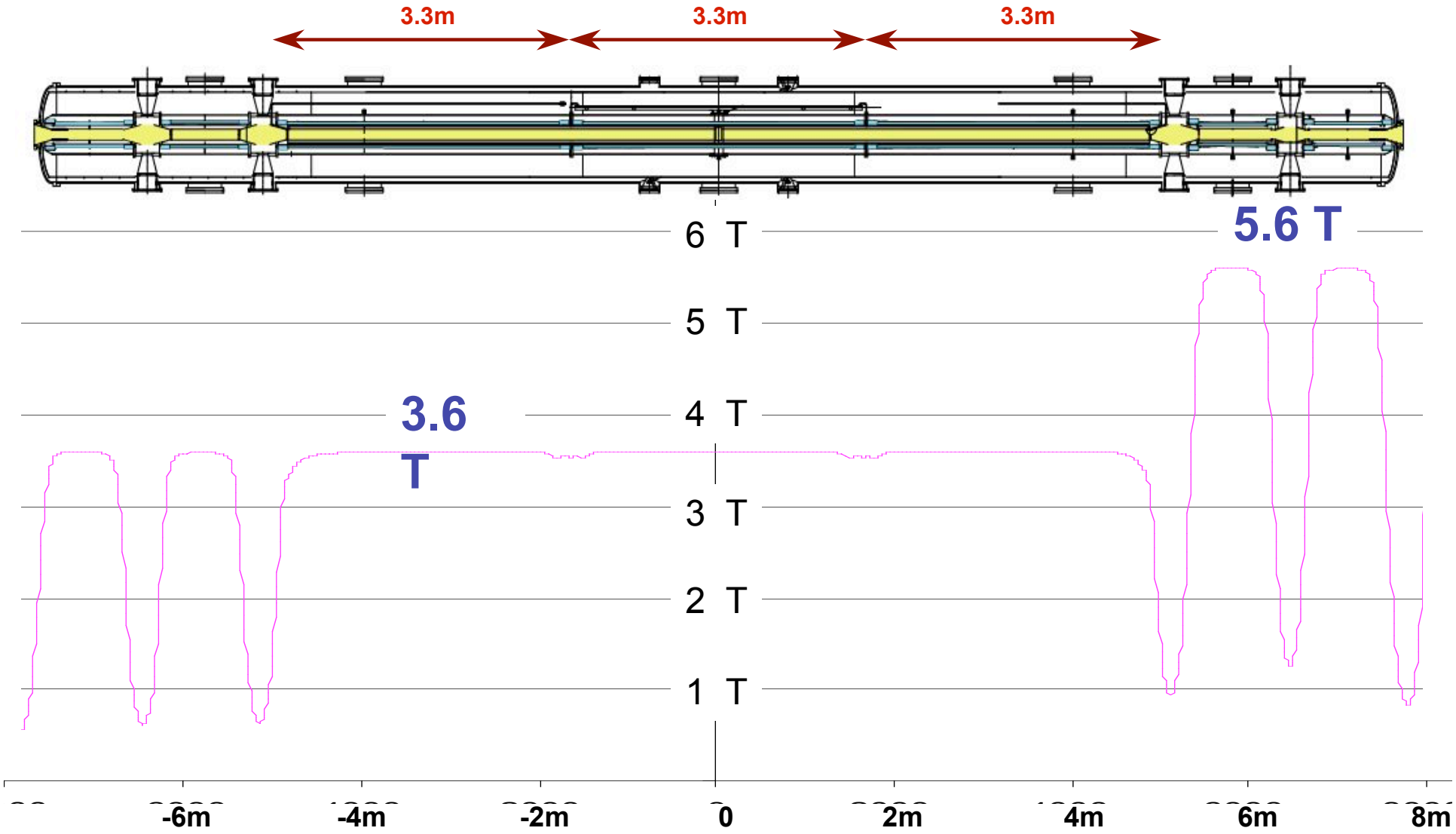

WGTS – cooling concept

$\Delta T \leq \pm 30$ mK !

operating temperature: 27–28 K

- **spatial** (homogeneity): **± 0.1%**
- **time** (stability/hour): **± 0.1%**

conceptual design:

2-phase Neon (boiling liquid)

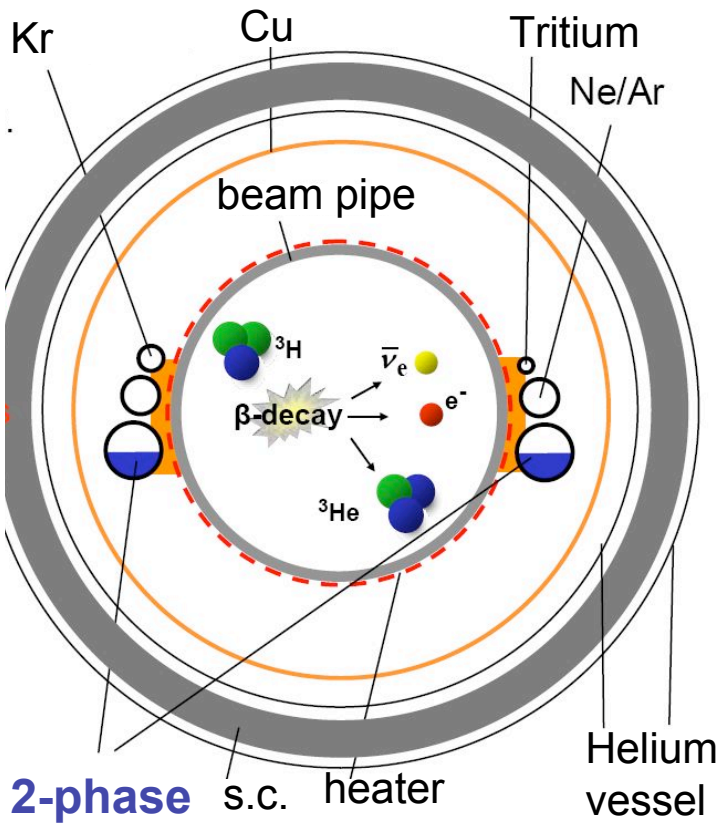

2-phase Neon

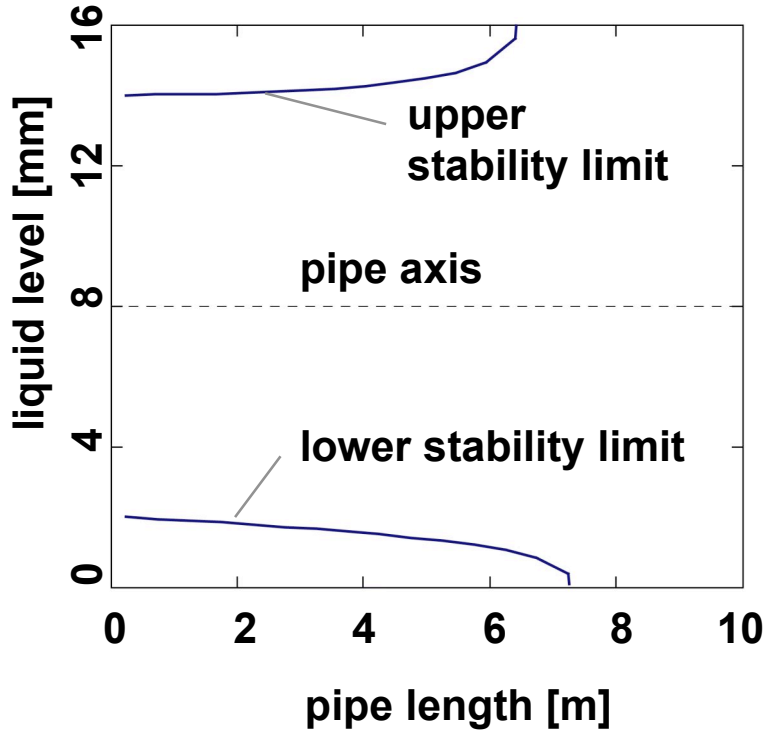

2 separate cooling pipes Ø=16mm
(2 wall barrier concept for T_2)

closed tritium cycle

test experiment TILO

design tritium cycle at TLK

experimental aims: test of

- molecular-kinetetic models
- measurement- & controlsystem

measurements since June 2005

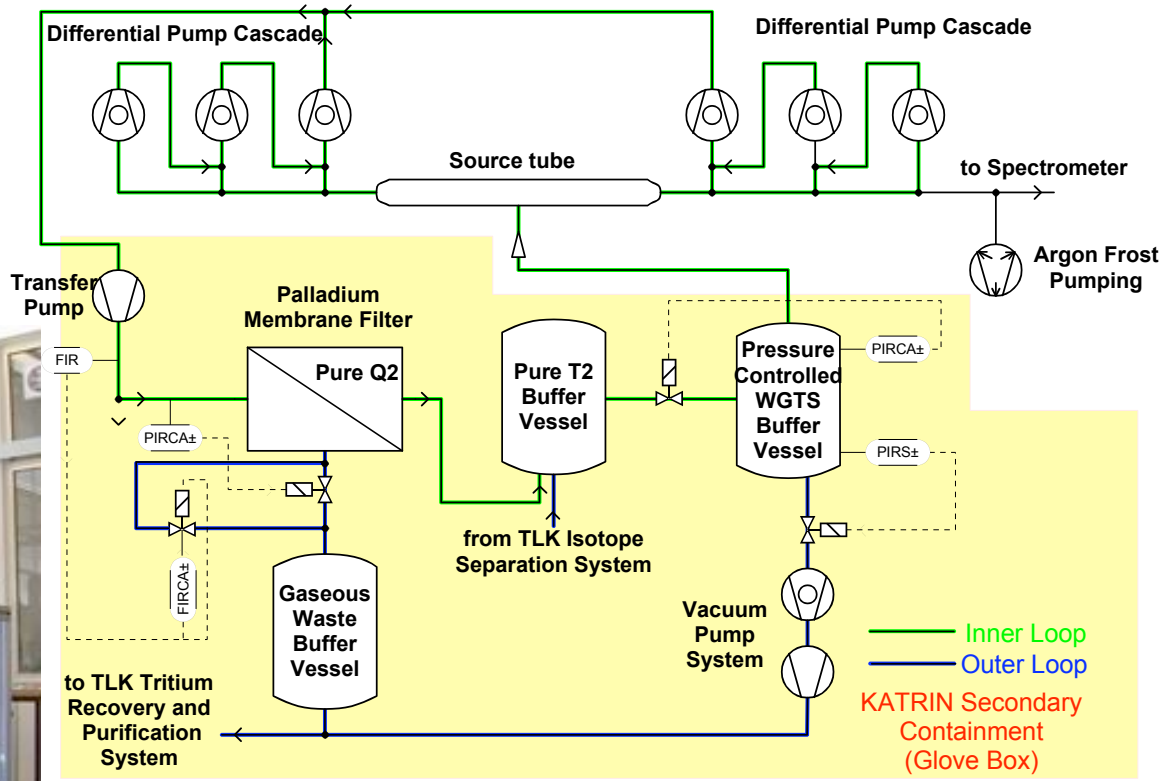

inner Loop – stable WGTS parameters

outer Loop – high tritium purity

differential pumping section

task: active pumping of T_2 molecules

↳ flux reduction by factor 2×10^8

method: serial TMP pumpports (2000 ℓ/s)

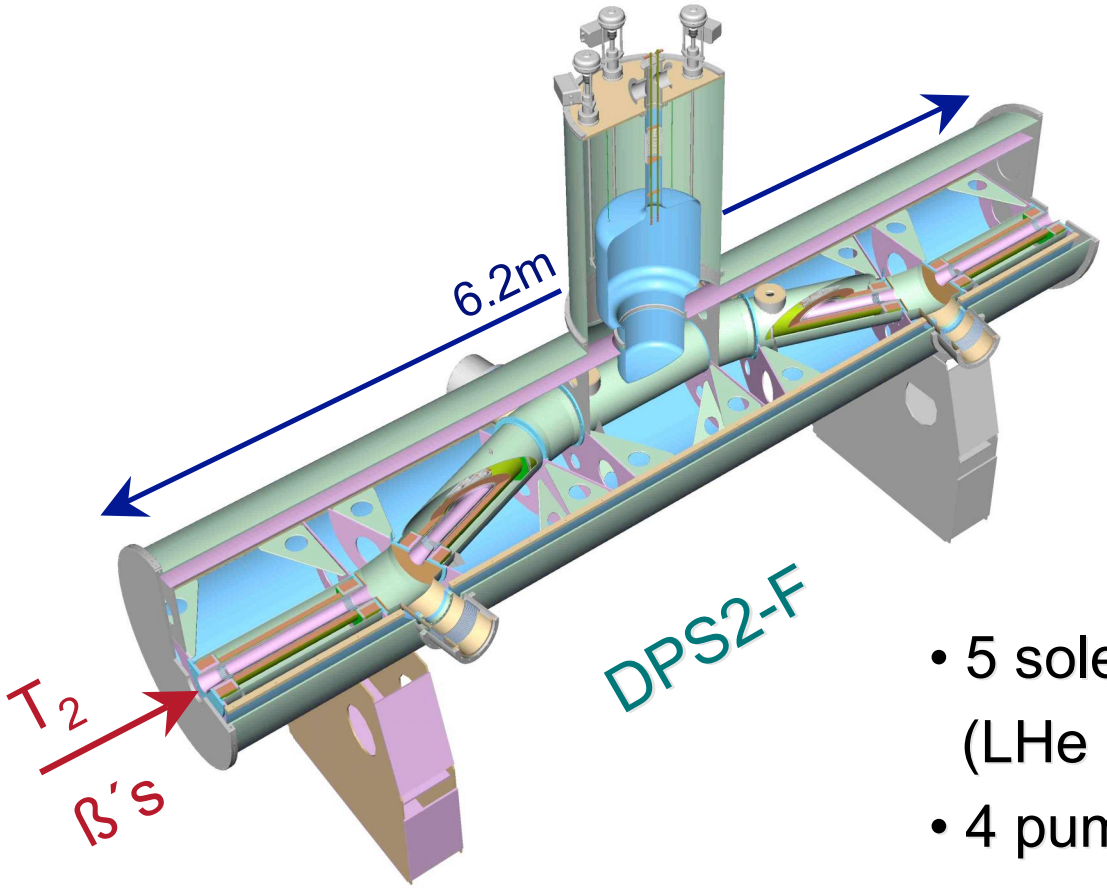

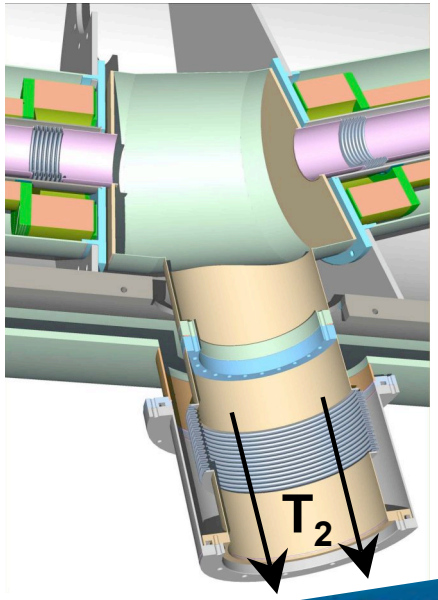

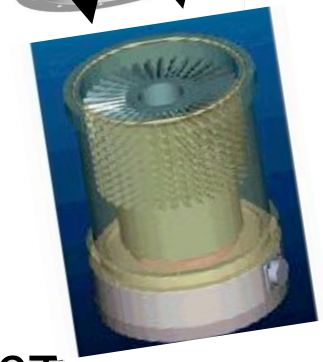

- 5 solenoids with B=5.6T (LHe bath cooling)
- 4 pumping ports (T=77K)

cryogenic pumping section

objective: retention of remaining tritium flux

tritium partial pressure spectrometer $p < 10^{-20}$ mbar

method: cryo-sorption on condensing Ar-frost

rate: <1 Ci T_2 in 60 days (regeneration with warm He-gas)

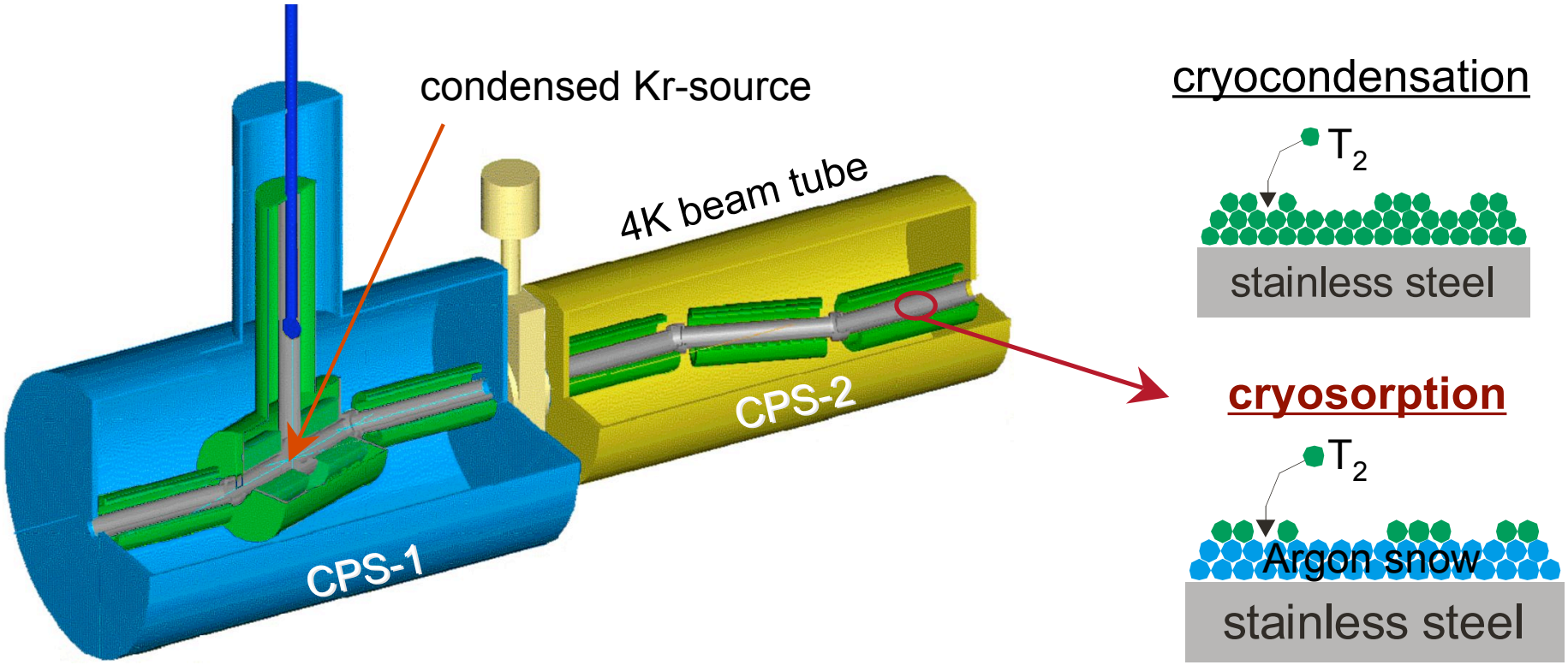

cryogenic pumping section

objective: retention of remaining tritium flux

tritium partial pressure spectrometer $p < 10^{-20}$ mbar

method: cryo-sorption on condensing Ar-frost

rate: <1 Ci T_2 in 60 days (regeneration with warm He-gas)

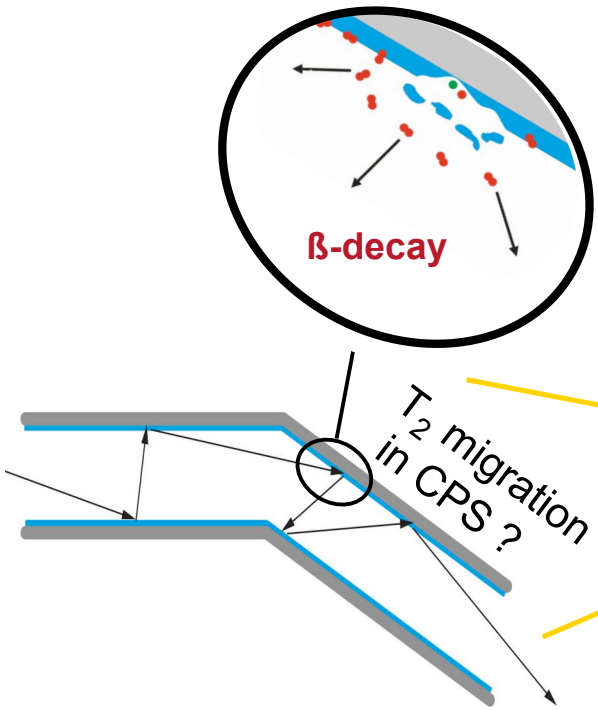

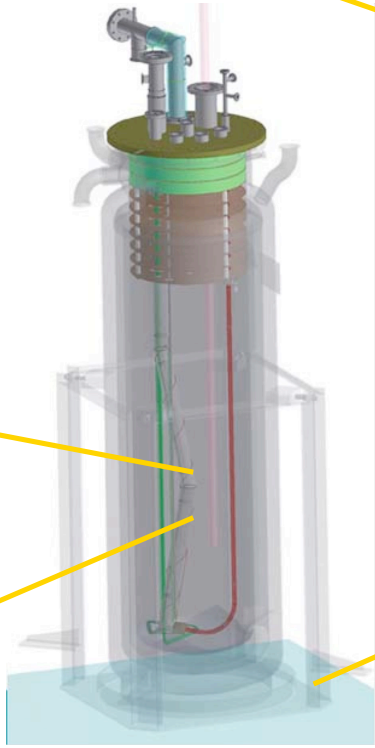

TRAP - Tritium Argon Frost Pump

electrostatic spectrometers

tandem design: pre-filter & energy analysis

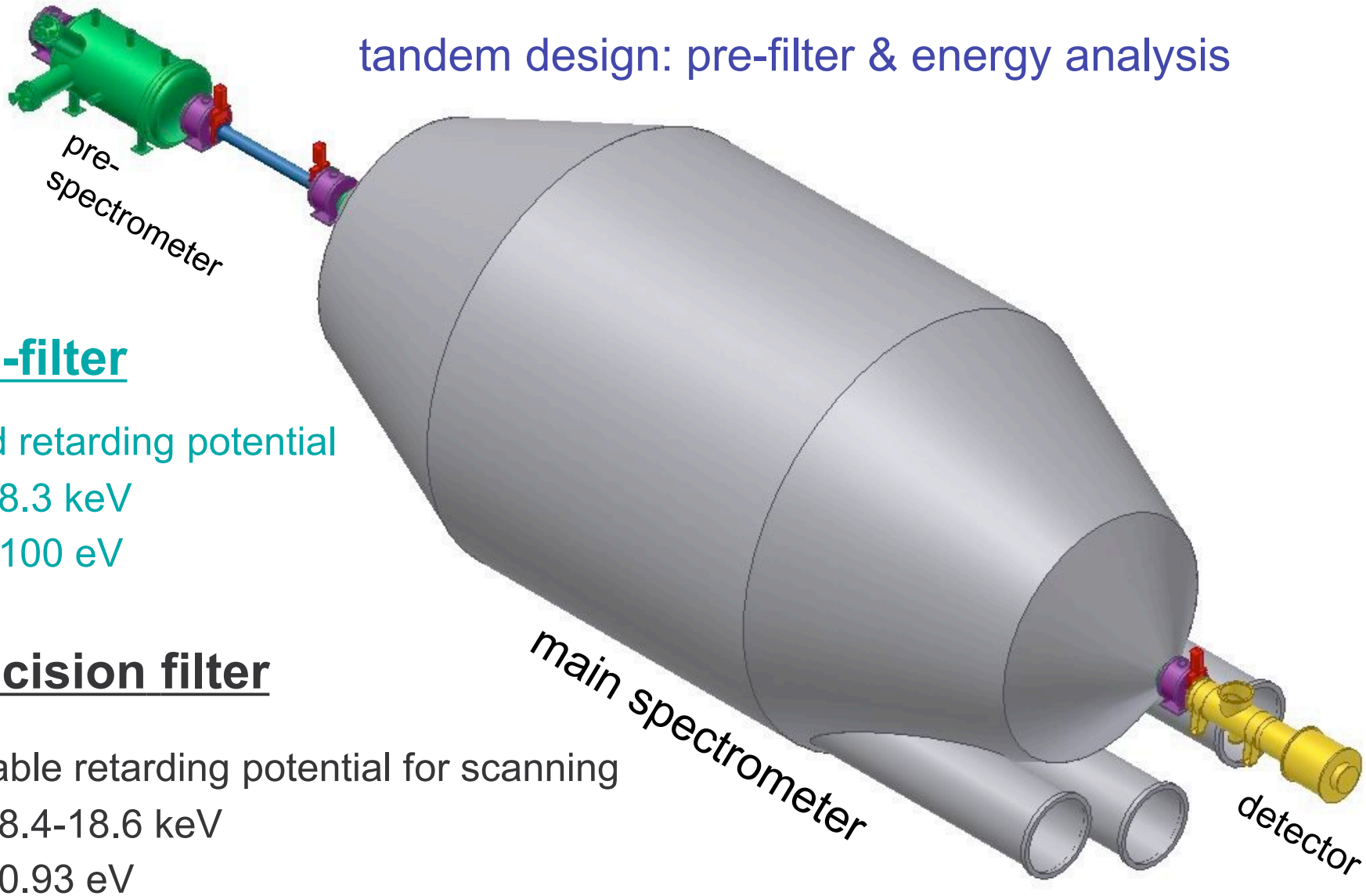

pre-filter

fixed retarding potential

U=18.3 keV

ΔE~100 eV

precision filter

variable retarding potential for scanning

U=18.4-18.6 keV

ΔE=0.93 eV

electrostatic spectrometers

tandem design: pre-filter & energy analysis

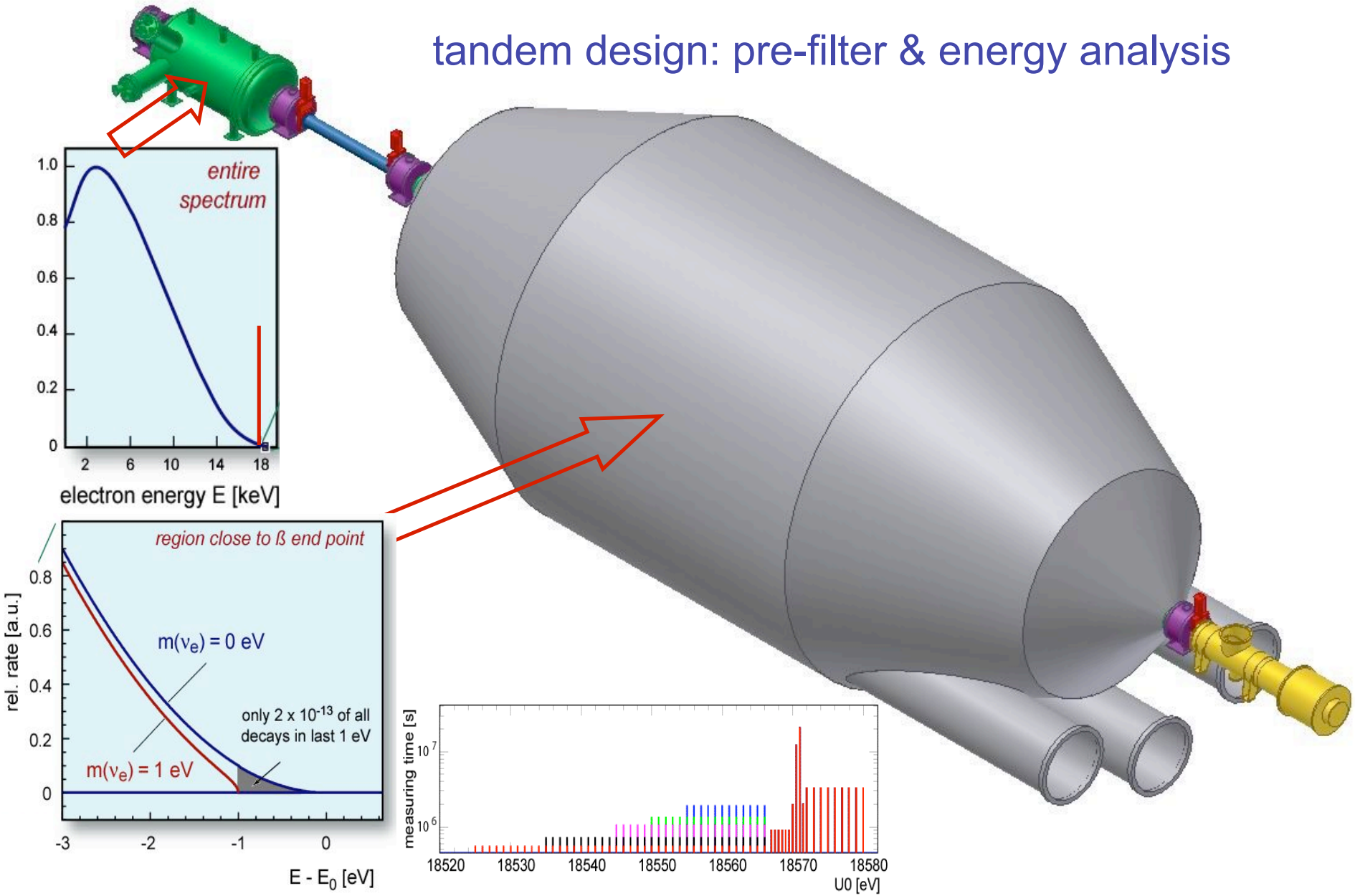

electrostatic spectrometers

tandem design: pre-filter & energy analysis

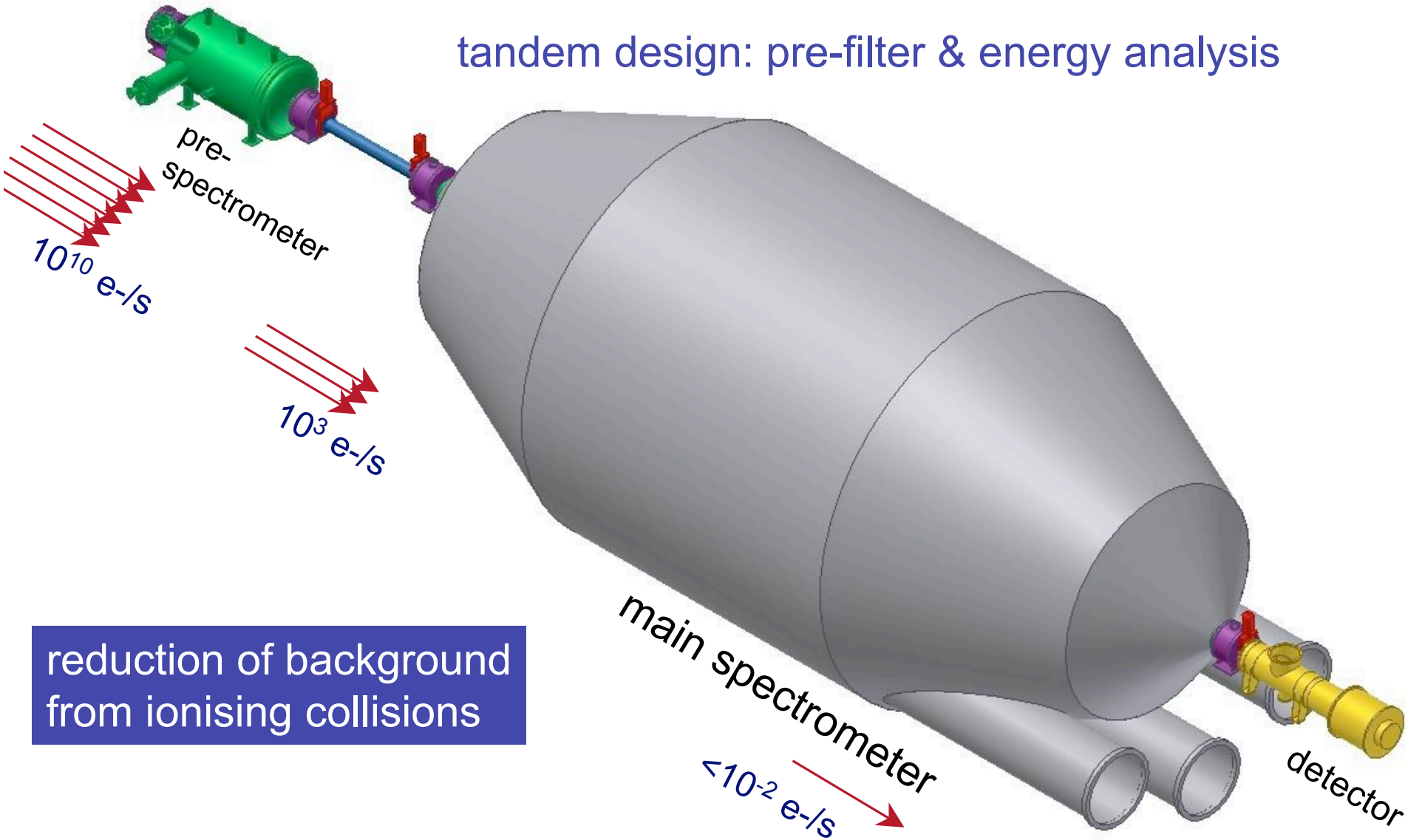

reduction of background
from ionising collisions

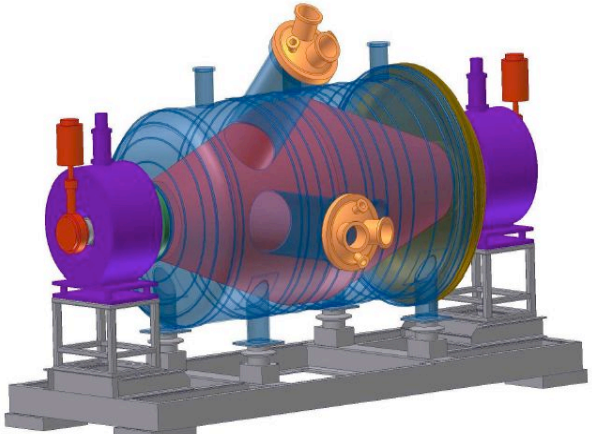

pre-spectrometer

assembly works at French manufacturer SDMS

leak test at SDMS

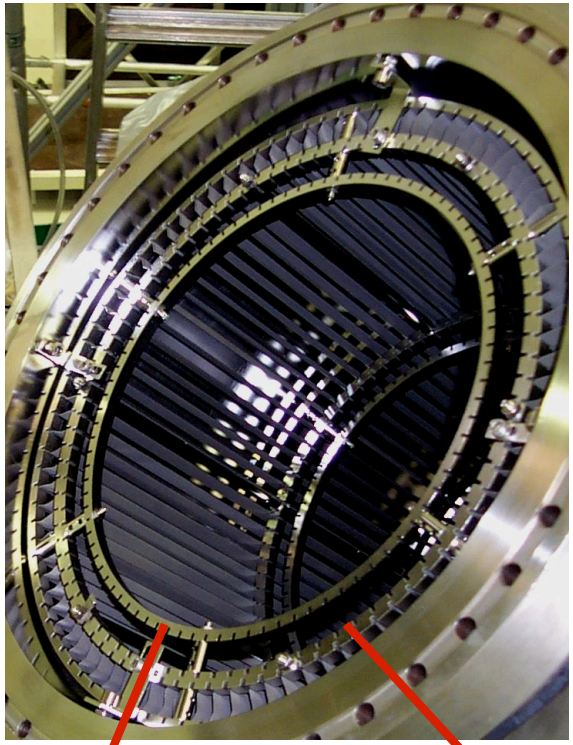

pre-spectrometer vacuum tests

UHV concept: TMP`s & NEG-getters

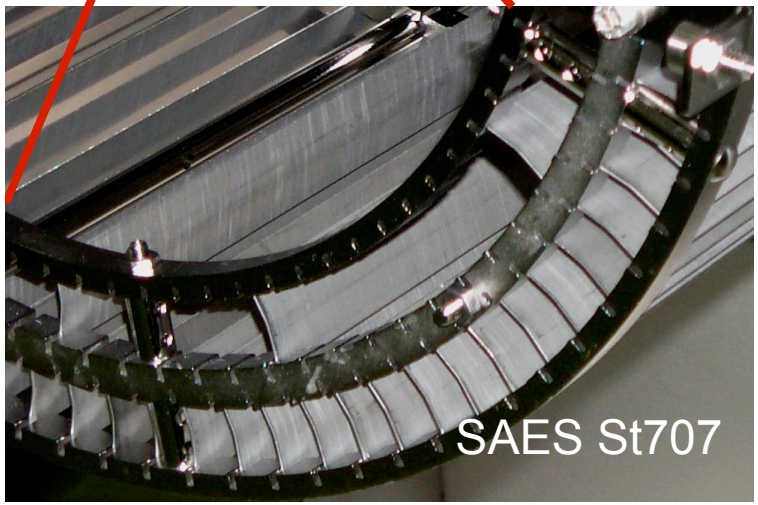

1. <u>outgassing rate @ -20°C</u>

specified: 1×10^{-12} mbar l / cm^2 s

measured: 7×10^{-14} mbar l / cm^2 s

gas charge: ~50% vessel, ~50% TMP&QMS

2. <u>final pressure</u>

specified: $p < 10^{-11}$ mbar @ -20°C

measured: $p < 10^{-11}$ mbar @ RT

pre-spectrometer: elmagn. tests

task: verification of electromagn. concept

inner wire electrode

s.c.-magnets

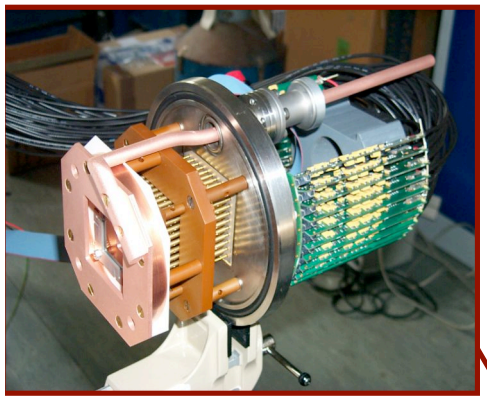

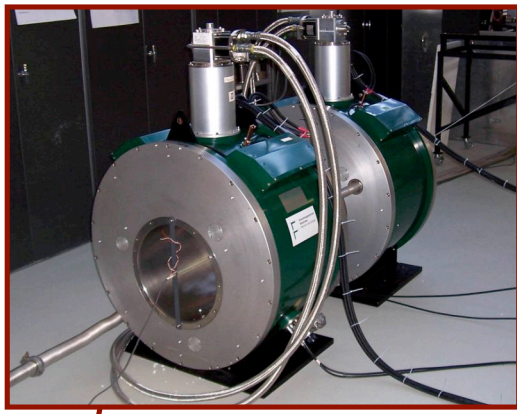

8x8 Si-PIN Array

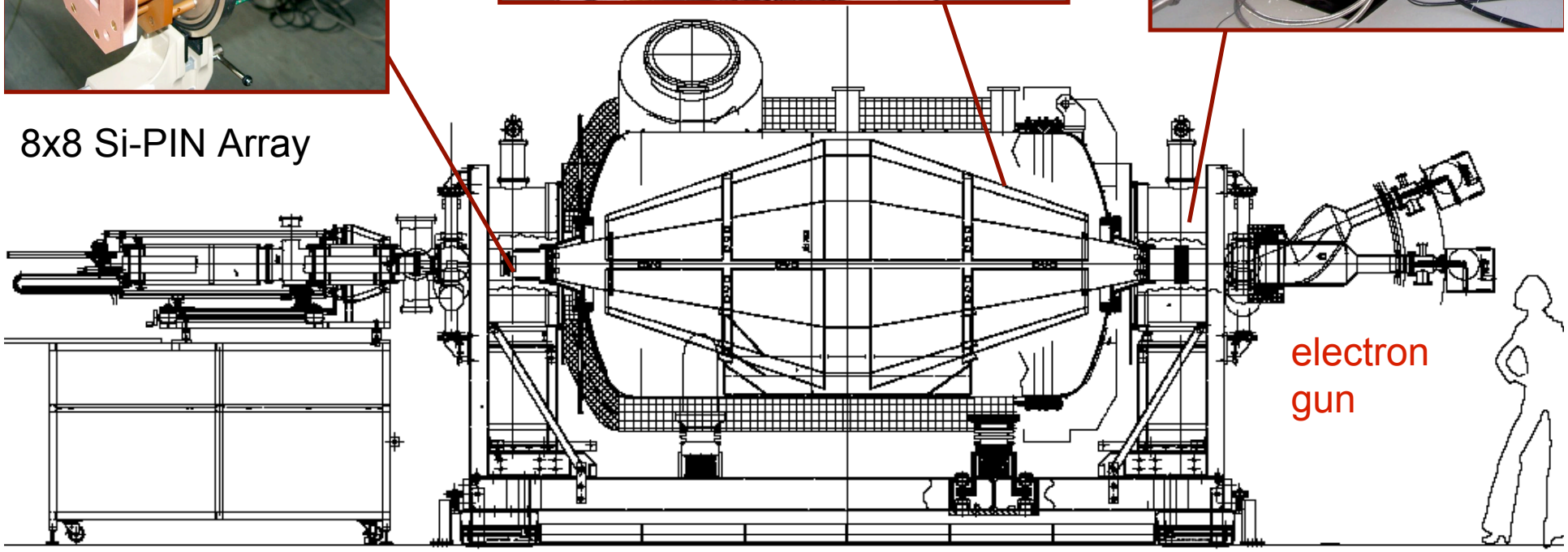

main spectrometer – design

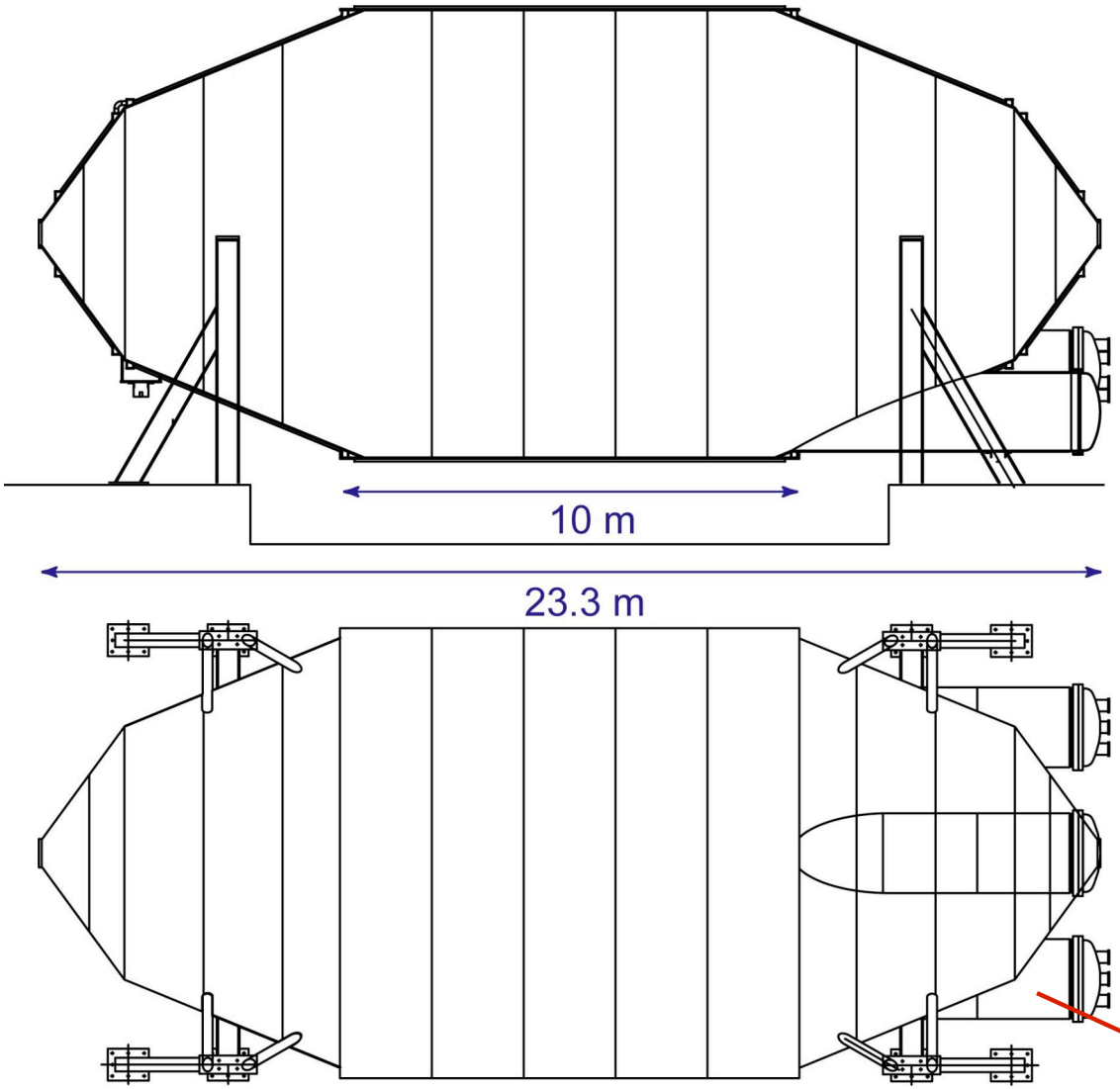

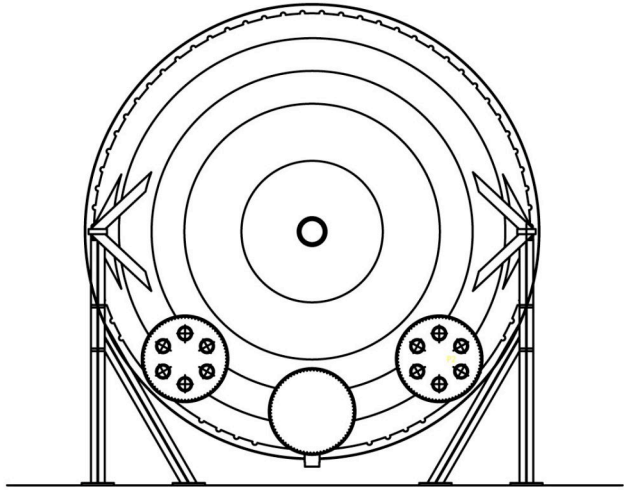

design parameters:

volume:	1258 m^3
surface:	605 m^2
thickness:	32 mm
material	1.4429
weight:	192 t

pumping port
for getters

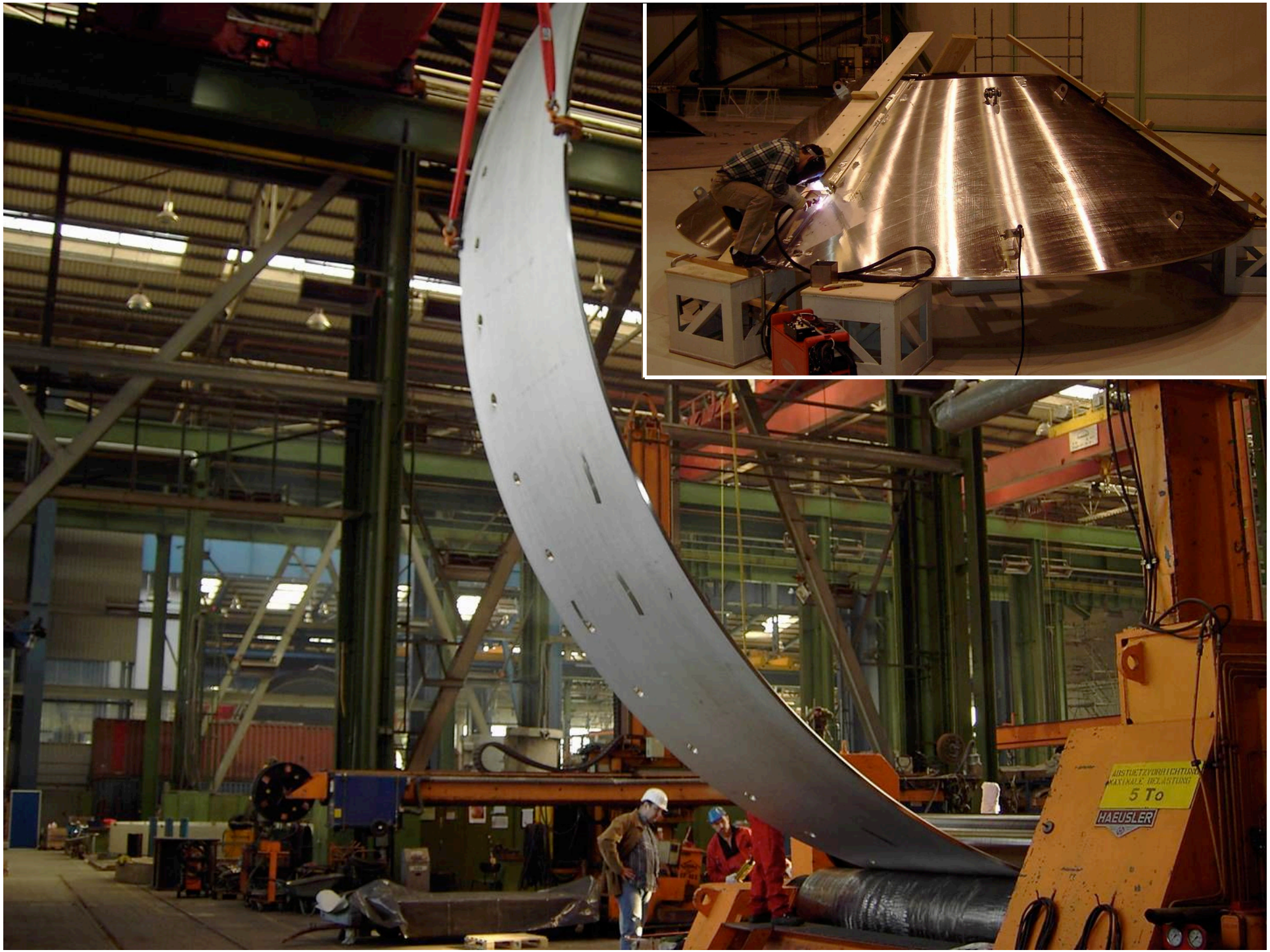
5 To
HAEUSLER

KATRIN main spectrometer – June 2006

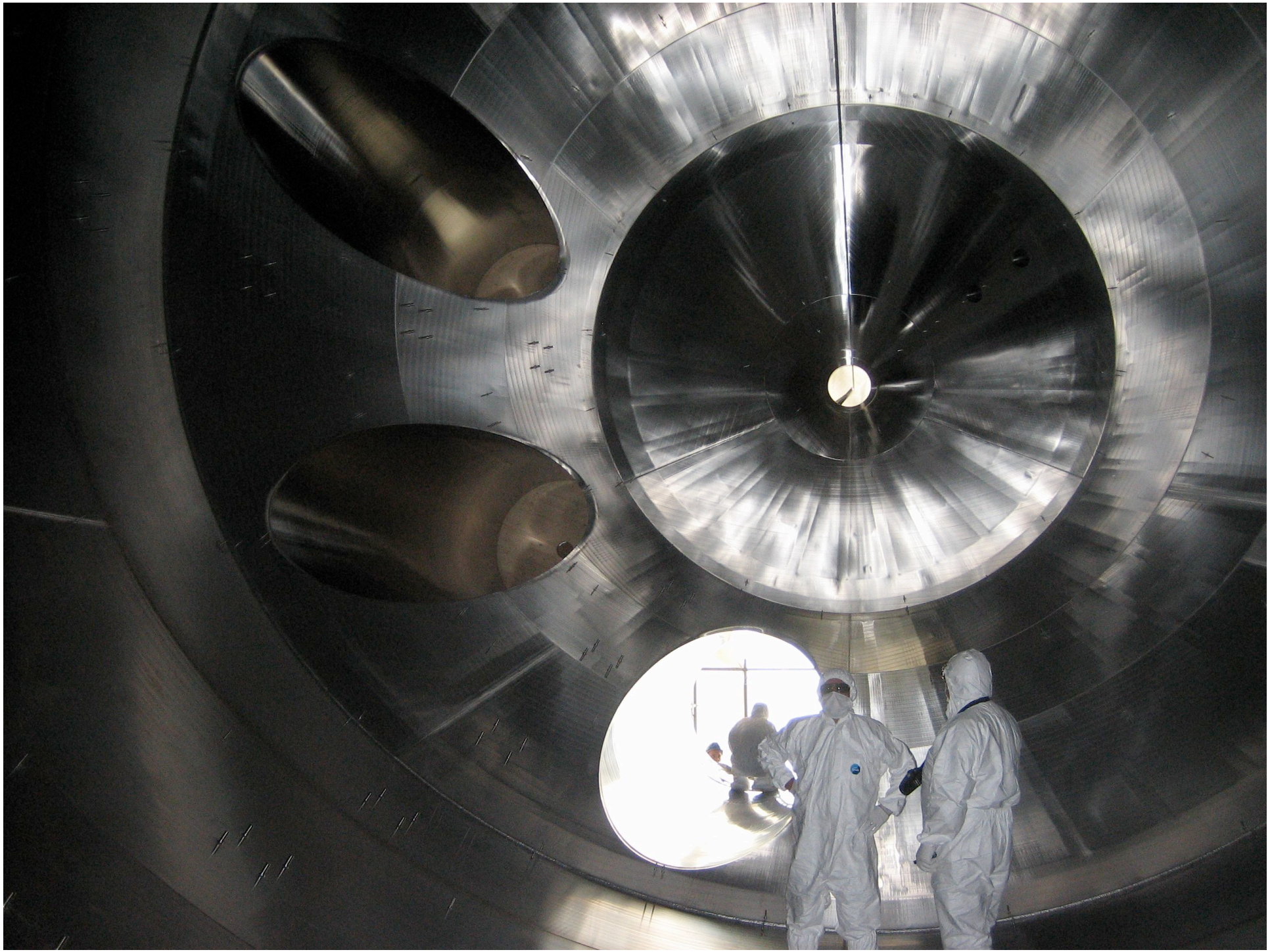

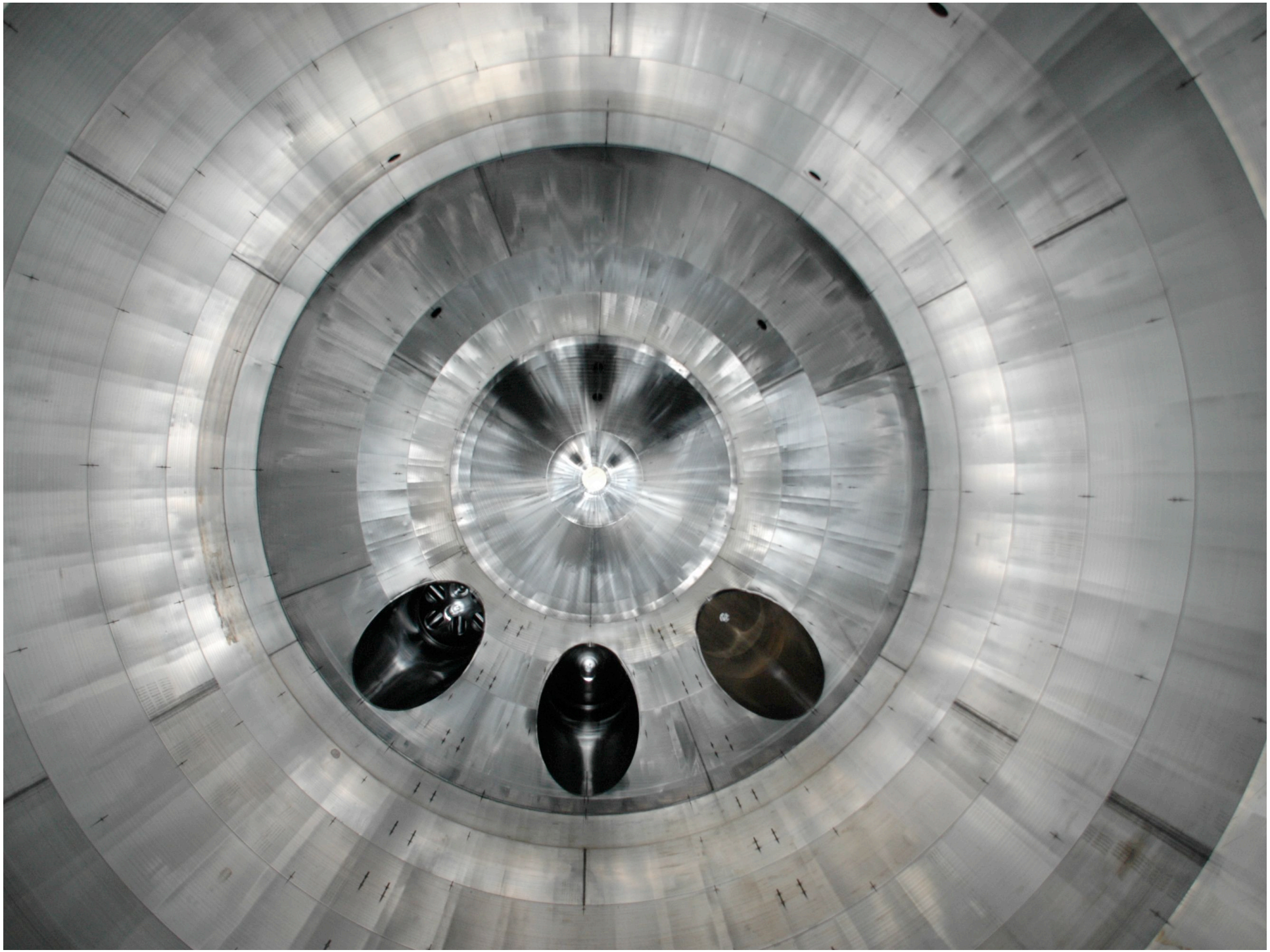


main spectrometer
– August 2006
initial vacuum test
p ≤ 6 × 10-8 mbar
1 TMP, no bake-out

main spectrometer – transport logistics

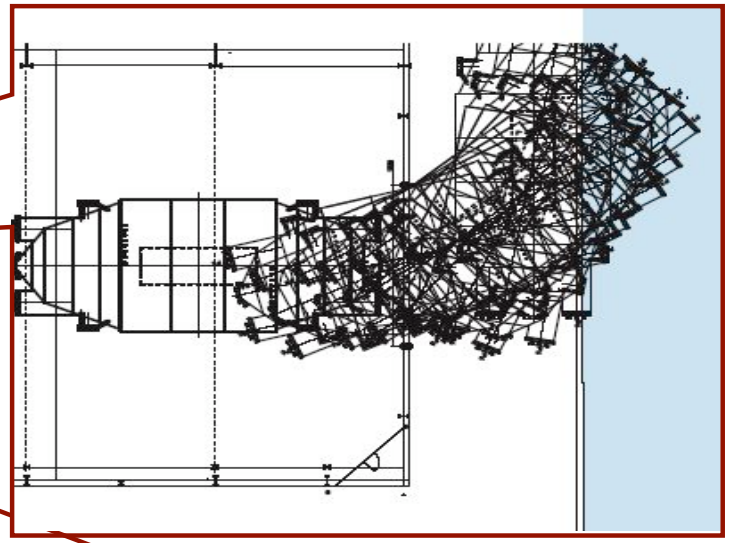

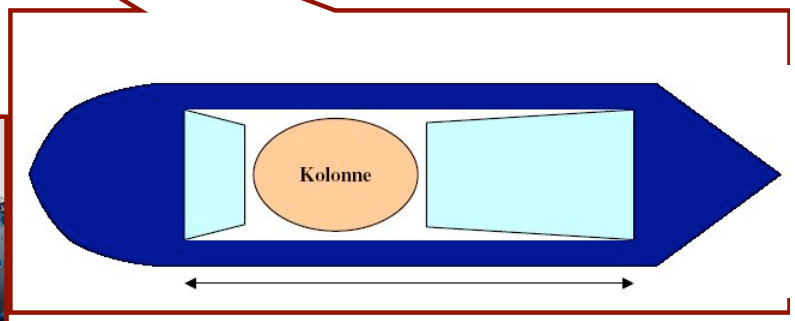

Delivery to FZK expected for fall 2006

main spectrometer – inner electrode

tasks of inner wire-based electrode system:

- background reduction
  - screening of low-energy electrons
  - removal of trapped particles
- fine forming of retarding potential

U Münster

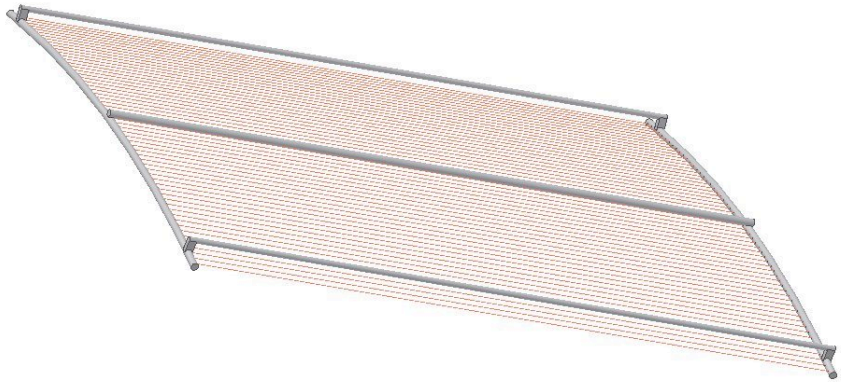

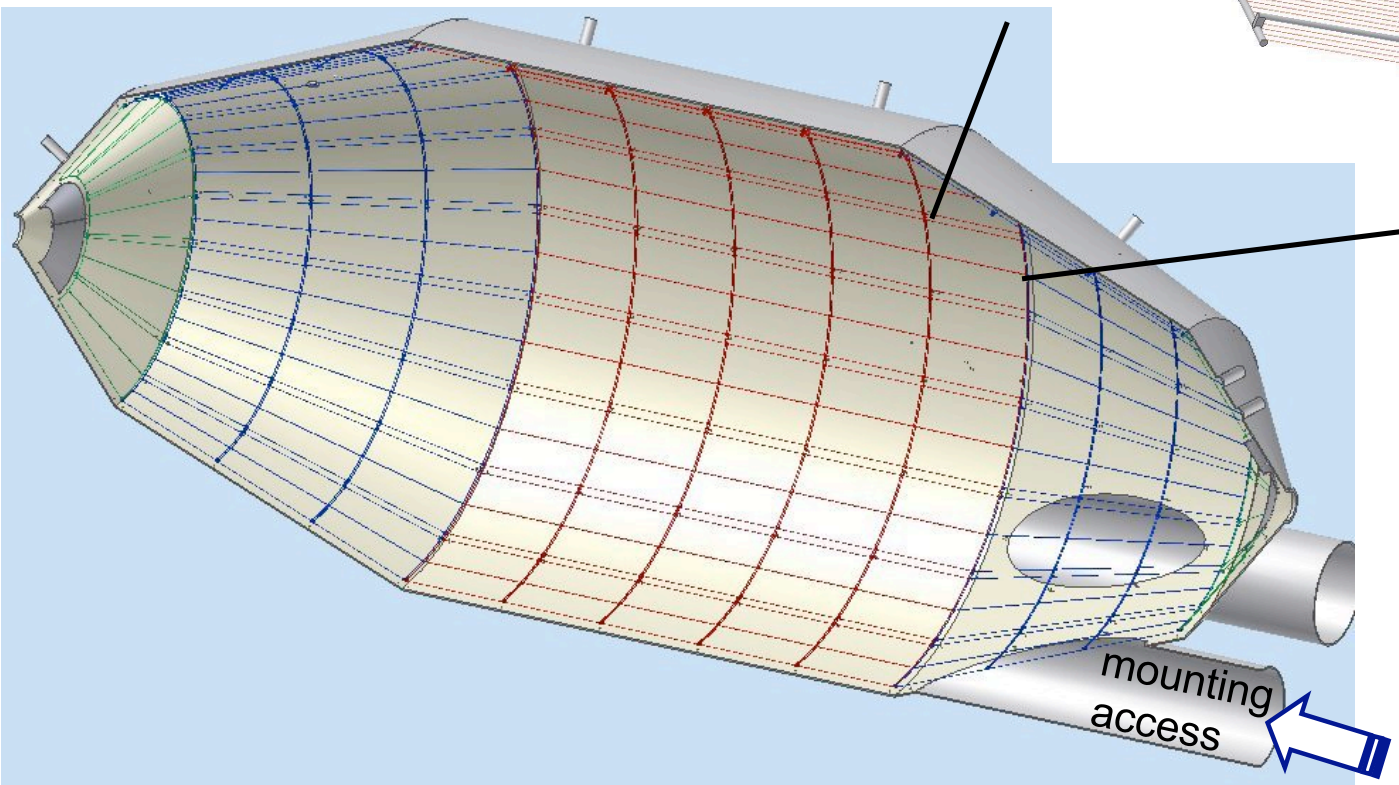

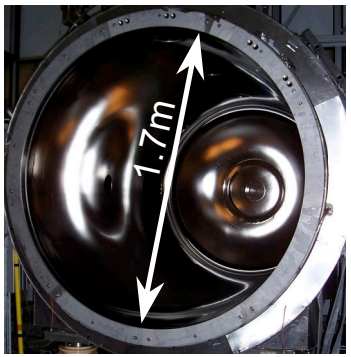

inner wire-based electrode system

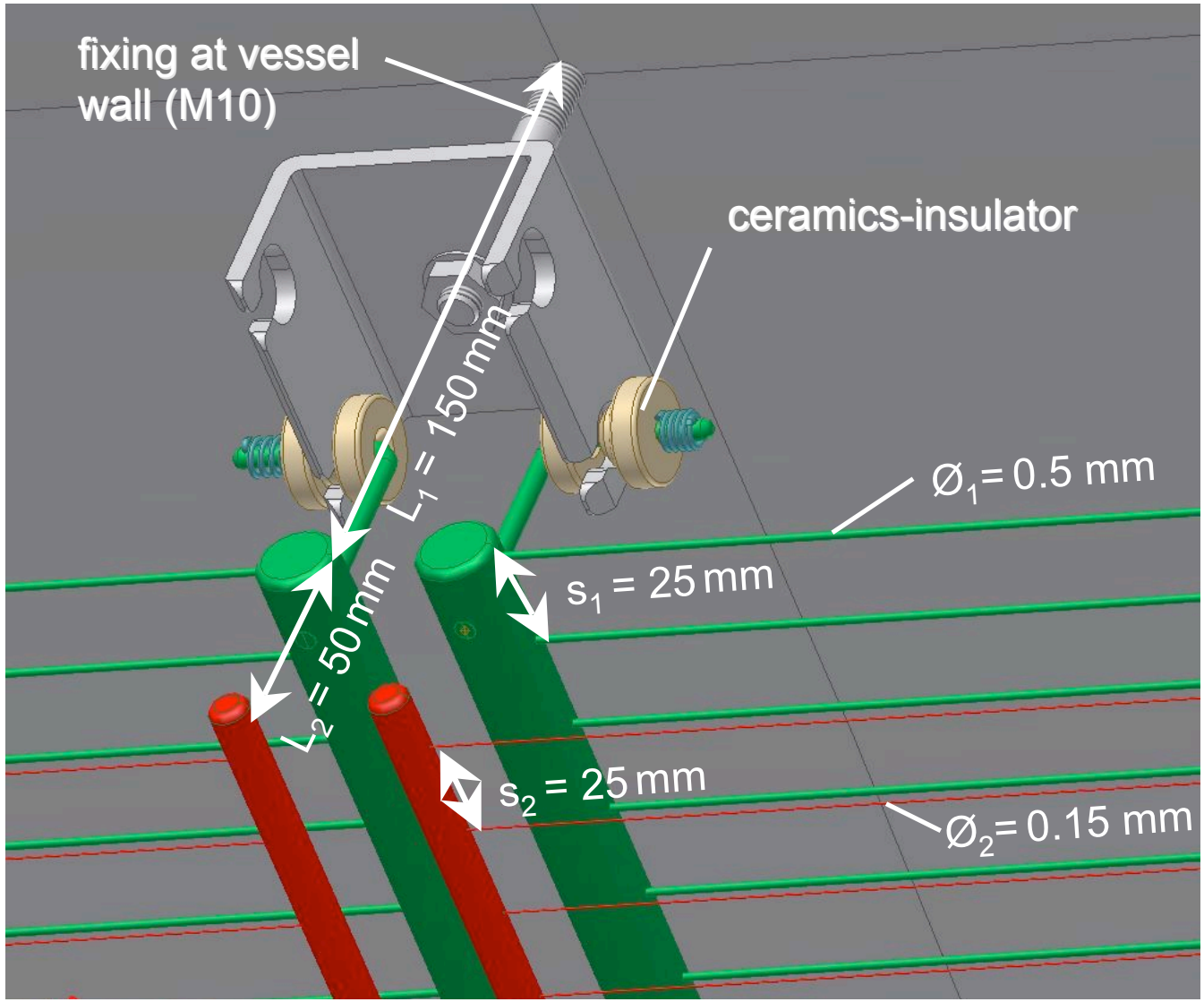

two-layer system

1. wire plane

parallel / equidistant
to spectrometer wall
const. wire spacing
const. $U_1 = U_{sp} + \Delta U_1$

2. wire plane

non-equidistant
var. wire spacing
var. $U_2 = U_{sp} + \Delta U_2$
wire sag: sub-mm!

precision HV supply

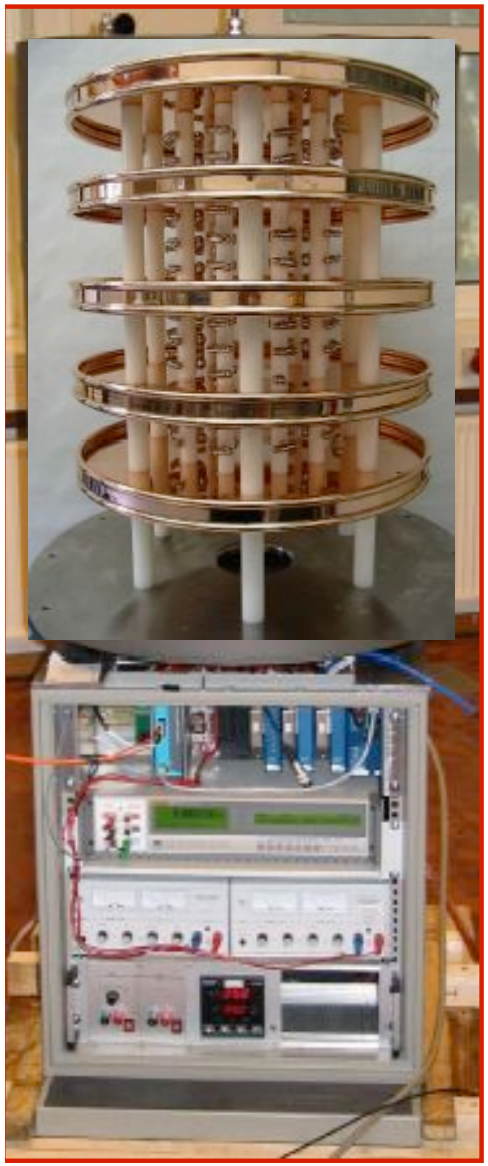

measurements require HV-stabilisation/monitoring/ calibration on ppm level (wideband: DC up to MHz)

0 - 35 kV

voltage divider 1:1972

0 - 10 V

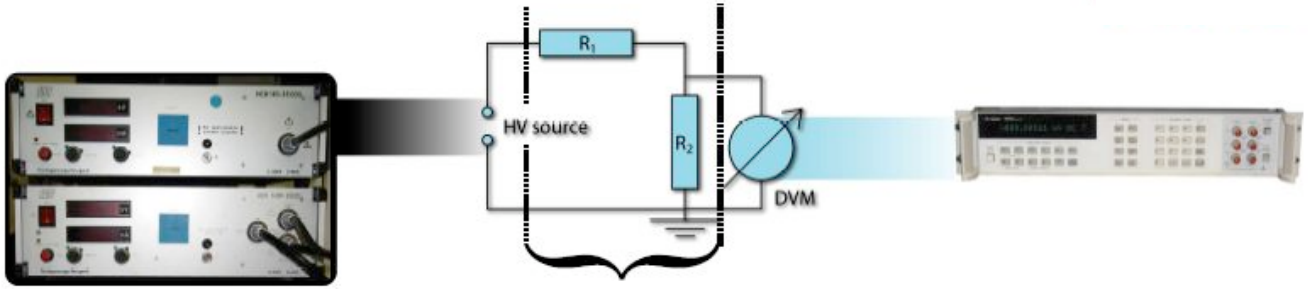

precision-HV power supply

< ± 5 ppm stability

precision-digital-Voltmeter

0.5ppm/h (4ppm/1y)

test at PTB: sub-ppm level reached!!

↳ ppm-voltage divider ☑

electromagnetic design

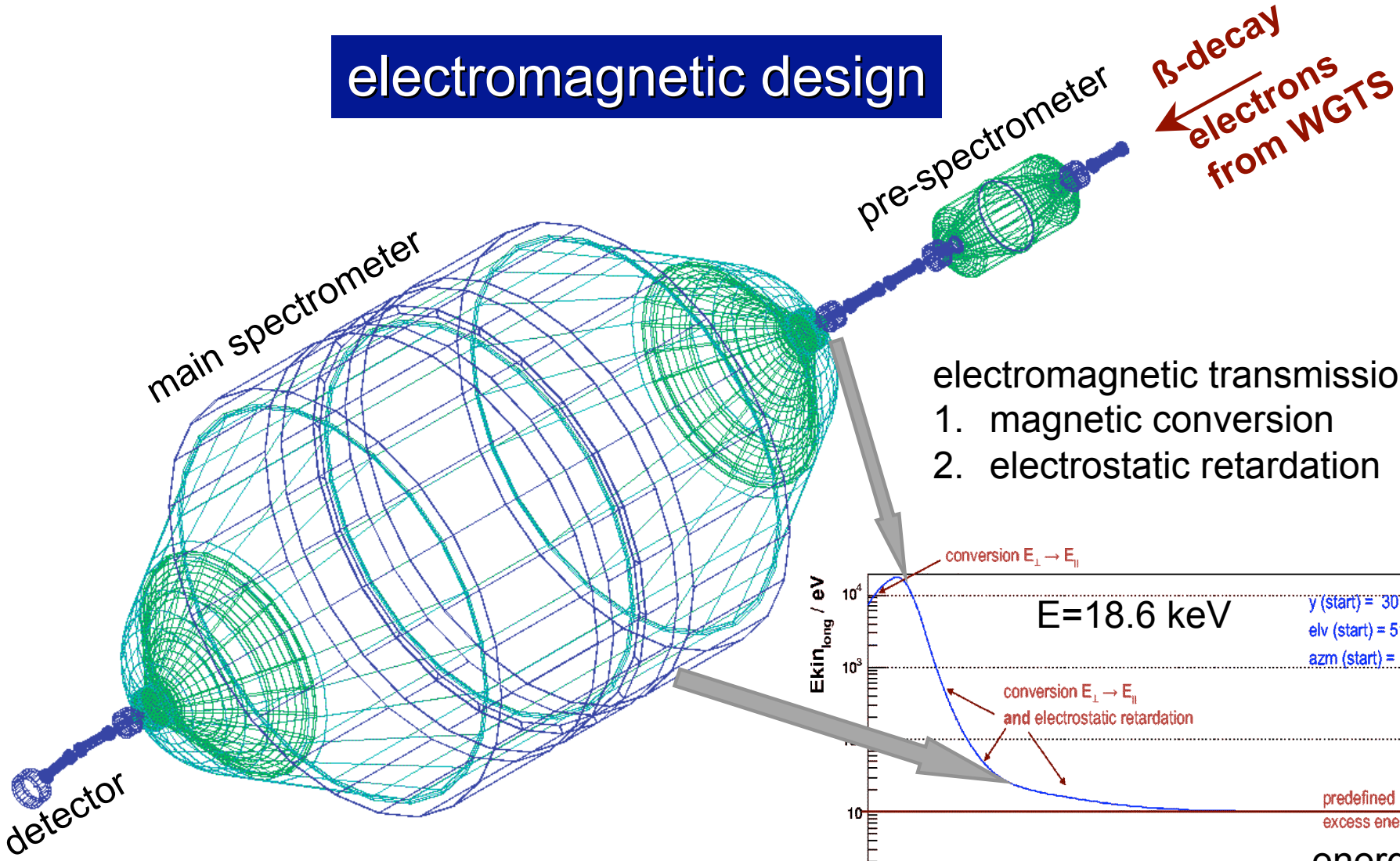

electromagnetic transmission :

1. magnetic conversion
2. electrostatic retardation

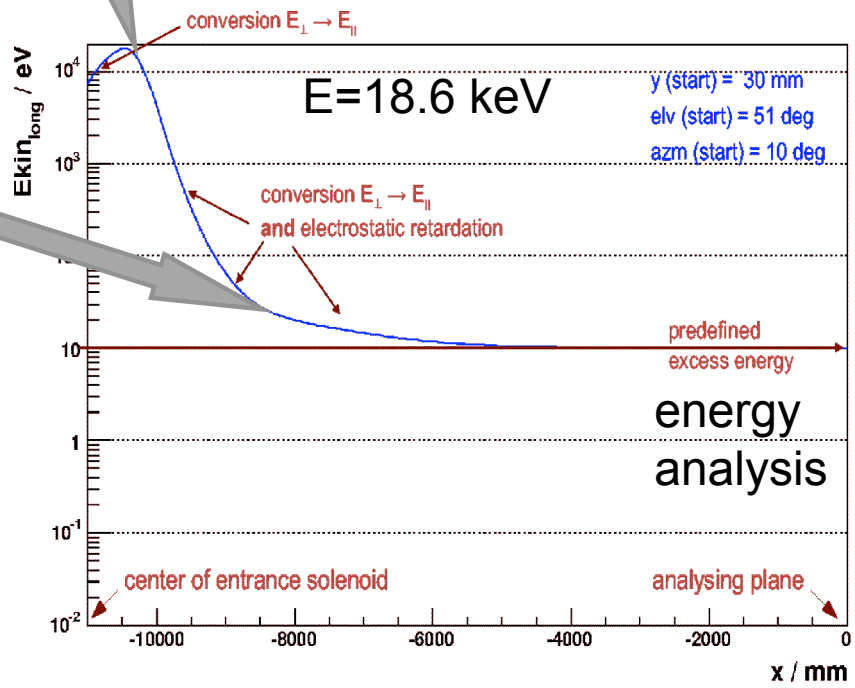

transported magnetic flux 191 T cm^2

air coil system

elctromagnetic layout based on additional air coil system:

- compensation earth magnetic field (EMC) *axially*
- homogeneity B-field analysing plane (LFC) radially

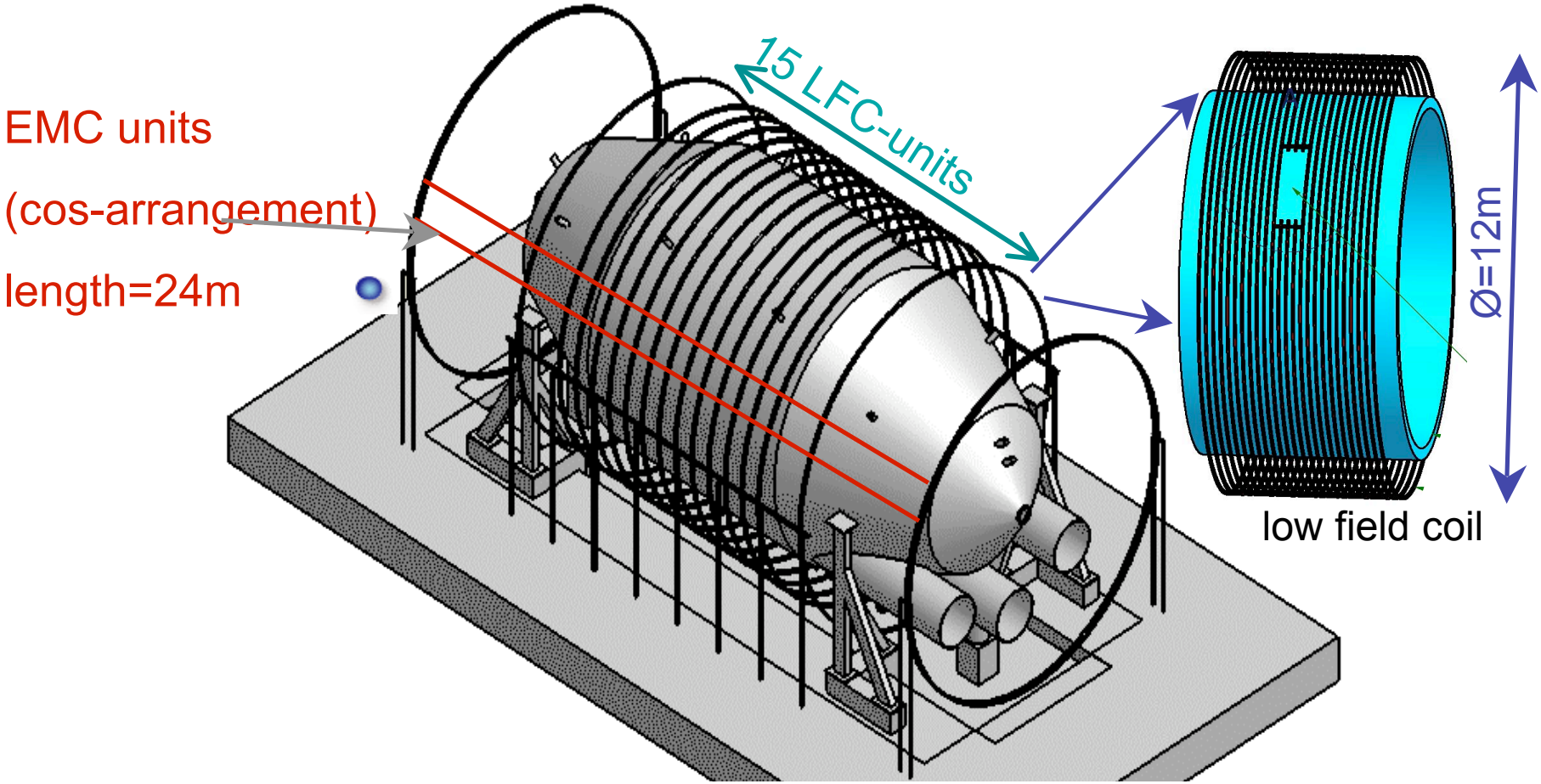

focal plane detector

task: detection of transmitted ß-decay electrons
with high energy resolution (ΔE =1 keV)
record radial profile of flux tube

aim: background minimisation, systematic effects

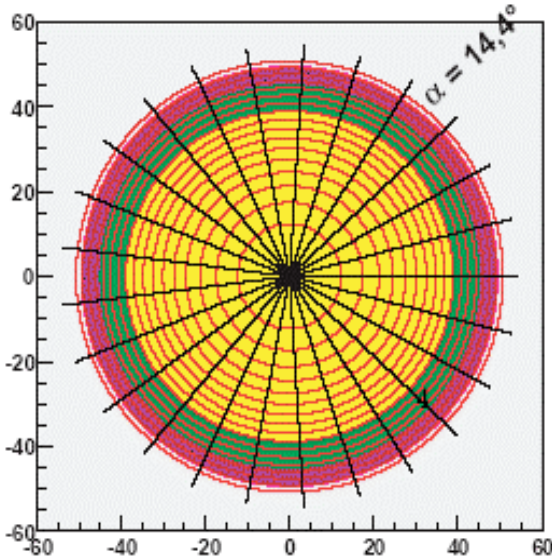

design: radially segmented
Si-PIN diode array
~400 pixels with A=100 cm²

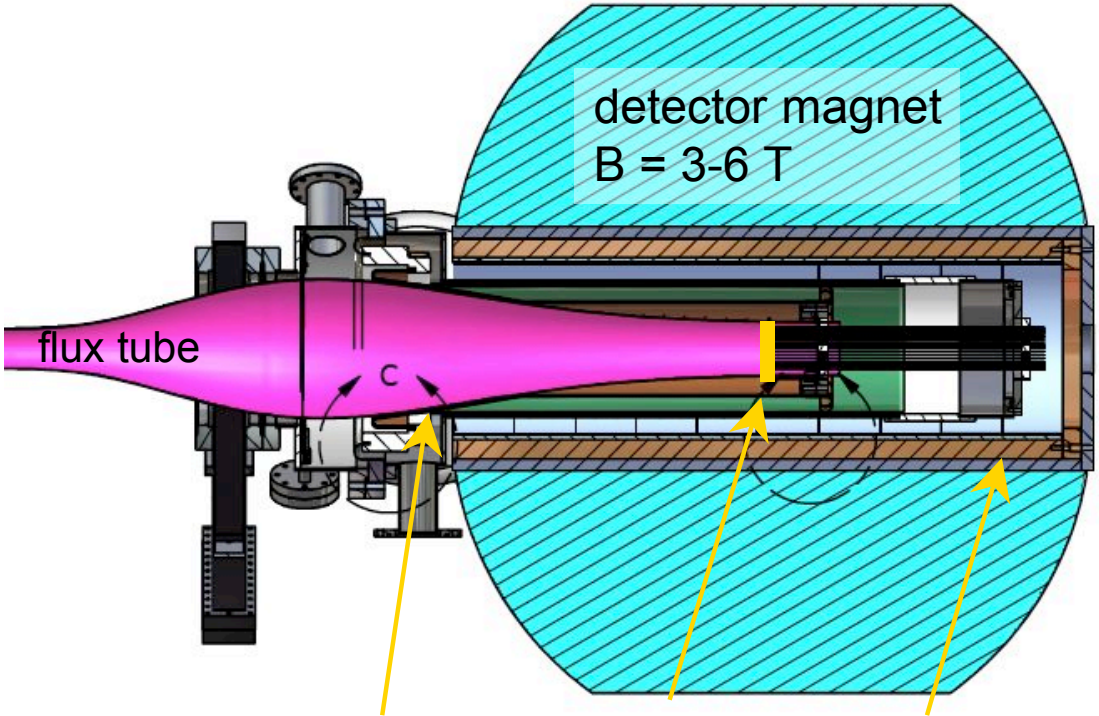

electrode (kV-acceleration)

low-level detector

shielding & veto

KATRIN design optimisation

improvement of experimental sensitivity (2001-04)

statistics

- enlargement of WGTS diameter (×2)
- enlargement of main spectrometer dimensions (Ø = 7 m → 10 m, L = 20 m → 23 m) for ΔE=0.93 eV
- improved tritium infrastructure (T_2 purity 70% → 95%)

back-ground

- inner wire electrode system (pre- & main spectrometer)
- active trap clearing (dipole fields, FT-ICR)
- extreme UHV with $p < 10^{-11}$ mbar

system. errors

- monitor spectrometer (reference for HV)
- system for measuring inelast. ß-scatterings in WGTS
- stabilisation of WGTS-parameters to 0.1% ($T, p_{inj}, \ldots$)
- optimisation & enlargement of tritium pumping section

KATRIN statistical errors

design optimisation 2002-2004: improved sensitivity

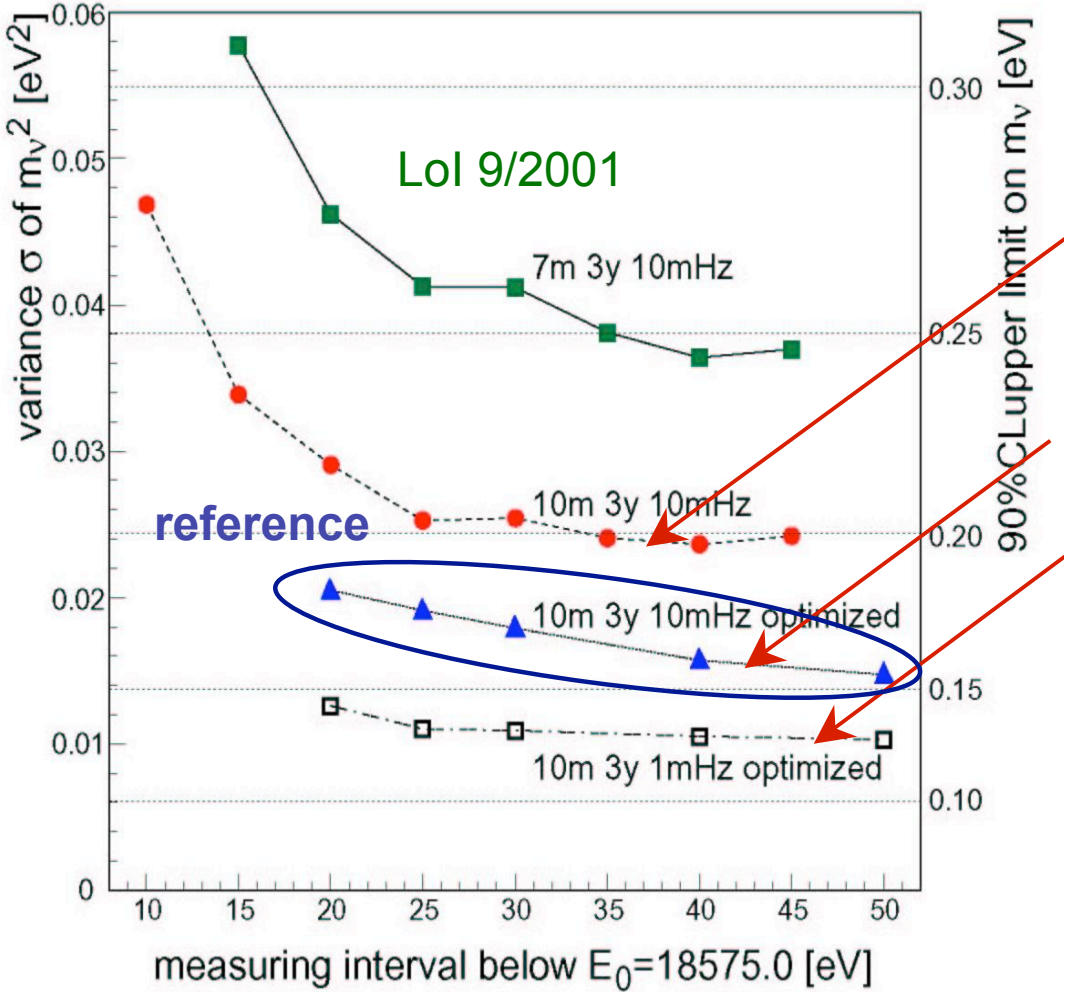

- 2× stronger gaseous source (Ø=75mm → Ø=90mm) required Ø=10m spectrometer)
- optimised measuring point distribution (~5 eV below E_0)
- active background reduction by inner electrode system, low background detector (needs further detailed tests)

background – sources & suppression

total background rate at Mainz/Troitsk: ~10 mHz, aim for same rate at KATRIN

- detector: aim for bg-rate in few mHz range, environmental γ's / X-rays & cosmics, , larger area: better energy resolution & better shielding, thinner detector, material selection
  develop background model on GEANT4.4 simulations

- spectrometer: aim for bg-rate in few mHz range

  a) low energy shake off electrons from tritium ß-decays
  1mHz bg-rate from ~10^{-20} mbar tritium partial pressure (cryotrapping section)

  T_2

  b) ß-decay electrons in keV-range that get trapped (-> ionising collisions)
  stringent XHV conditions <10^{-11} mbar & active removal of trapped particles

  c) cosmic ray induced δ-electrons (muons, elmag. showers, hadronic component)
  can create ions, -> tertiary reactions: electrons & H^- ions,
  stringent XHV conditions <10^{-11} mbar & active removal of trapped particles

  CR

  ß's

  d) trapped ß-electrons (from 'normal' tritium decays in WGTS)
  stringent XHV conditions <10^{-11} mbar & active removal of trapped particles

- sources: a) ß-electrons from tritium decays in areas with different source potential
  b) ß-electrons from T^- ions (higher end-point) careful electromag. design

Systematic uncertainties

$$\Delta m_\nu^2 = -2\,\sigma_{syst}^2$$

general relation for KATRIN statistics

1. inelastic scatterings of ß´s inside WGTS (major uncertainty in KATRIN)
   - requires dedicated e-gun measurements, unfolding techniques for response fct.
2. HV stability of retarding potential on ~1ppm level required
   - precision HV divider (PTB), monitor spectrometer beamline
3. fluctuations of WGTS column density (required < 0.1%)
   - e-gun measurements, rear detector, rear plate,
     Laser-Raman spectroscopy, stabilisation of T=27K beam tube, injection pressure
4. WGTS charging due to remaining ions (MC: ϕ<20mV)
   - inject low energy meV electrons from rear side, diagnostic tools available
5. final state distribution
   - very reliable quantum-chem. calculations exist, new calc. by J Tennyson (UCL)

KATRIN sensitivity

improvement of experimental sensitivity (2001-04)

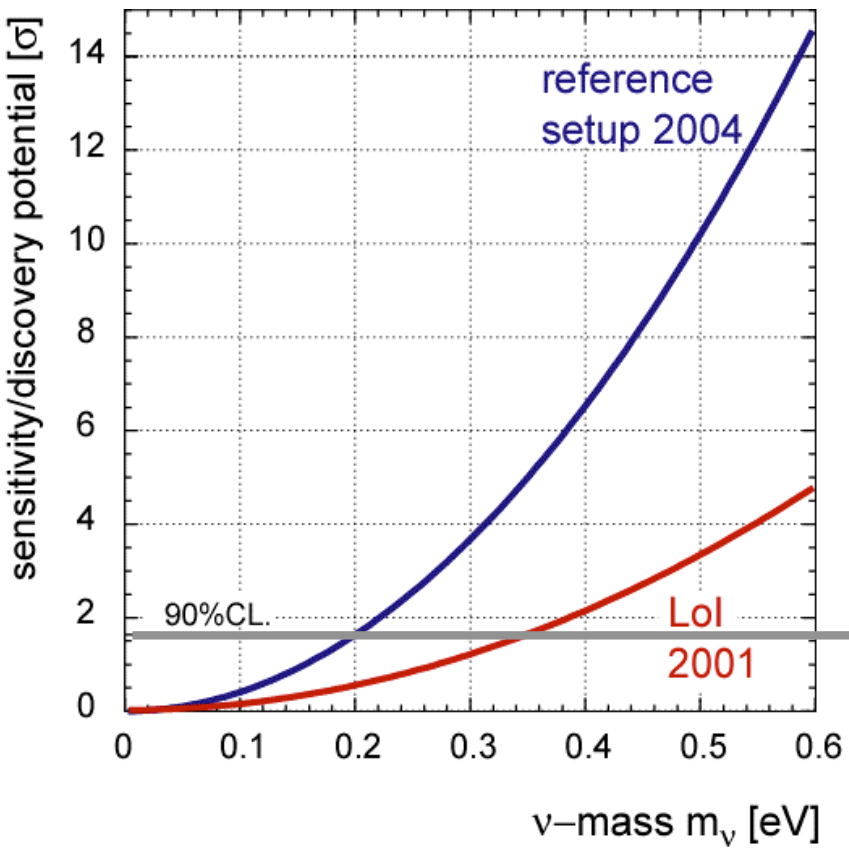

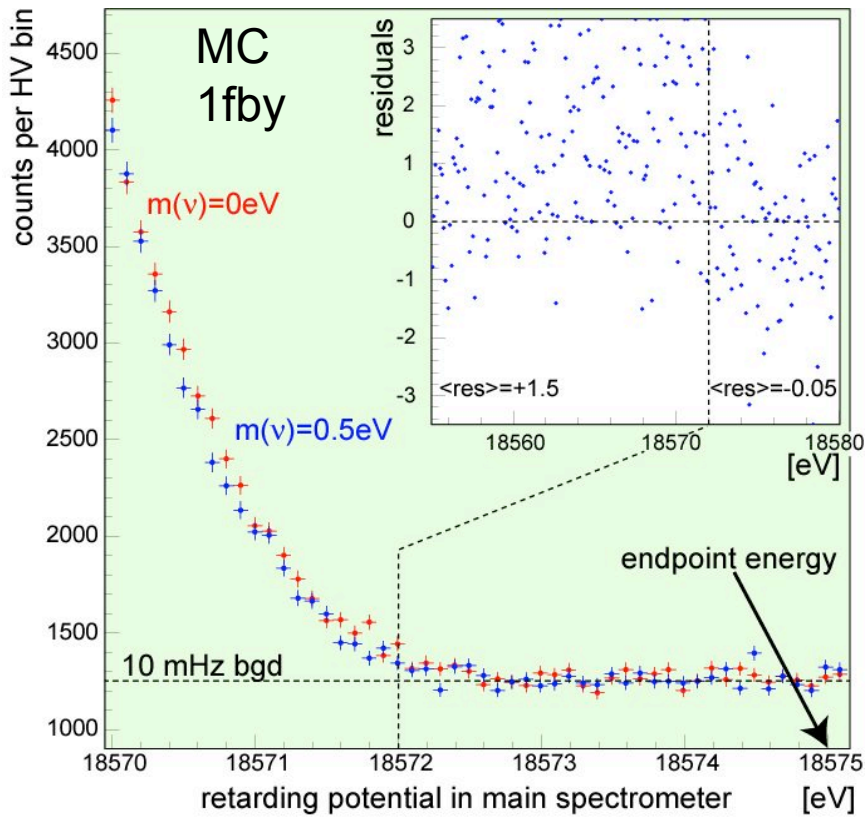

sensitivity (90% CL)
m(ν) < 0.2 eV

KATRIN sensitivity

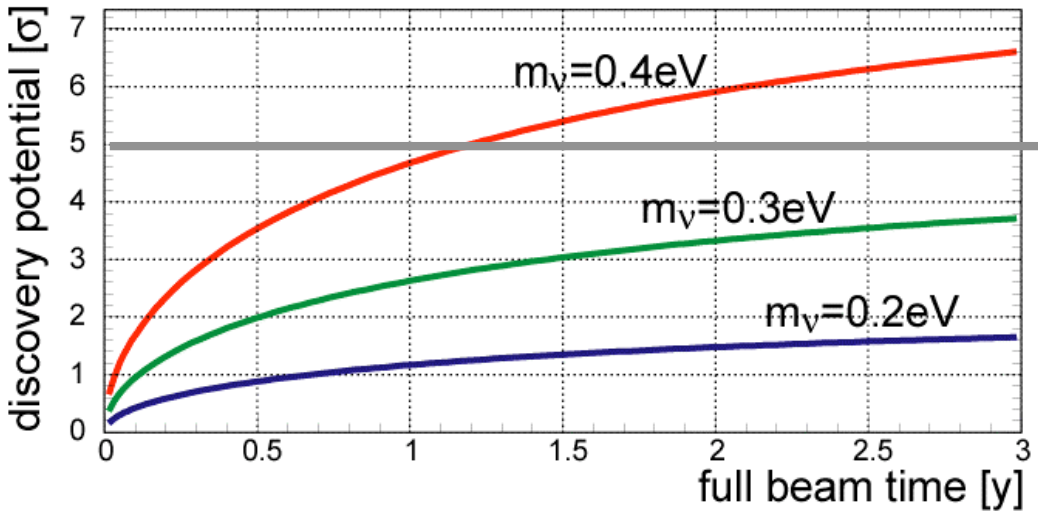

discovery potential
m(ν) = 0.35 eV (5σ)

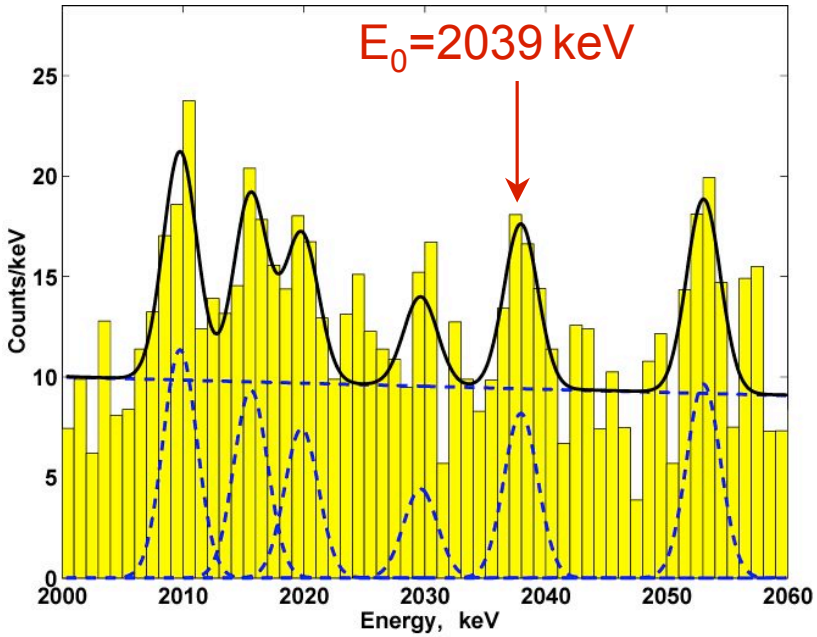

claim for m_{ee}=0.44 eV (4.2σ)

[m_{ee} = 0.1-0.9eV]

HV Klapdor et al.
Phys.Lett. B586 (2004) 198

KATRIN Collaboration

at present > 105 members
D-USA-UK-RU-CZ-BR
18 institutes
since 2005: MIT, UCL

K. Maier, R. Vianden
Universität Bonn, Helmholtz - Institut für Strahlen- und Kernphysik (D)

J. Herbert, O. Malyshev, R. Reid
ASTeC*, CCLRC- Daresbury Laboratory, Daresbury (UK) (*Expertengruppe)

I.N. Meshkov, Y. Syresin
JINR*, Dubna (RU) (*assoz. Mitglied)

A. Osipowicz
Fachhochschule Fulda, FB Elektrotechnik (D)

T. Armbrust, L. Bornschein, G. Drexlin, F. Eichelhardt, F. Habermehl, F. Schwamm, J. Wolf
Universität Karlsruhe, Institut für Experimentelle Kernphysik (D)

J. Blümer, K. Eitel, A. Felden, B. Freudiger, F. Glück, S. Grohmann, R. Gumbsheimer, T. Höhn, H. Hucker, N. Kernert, H. Krause, M. Mark, X. Luo, K. Müller, S. Mutterer, P. Plischke, K. Schlösser, U. Schmitt, M. Steidl, H. Weingardt
Forschungszentrum Karlsruhe, Institut für Kernphysik (D)

A. Beglarian, H. Gemmeke, S. Wüstling
Forschungszentrum Karlsruhe, Institut für Prozeßdatenverarbeitung und Elektronik (D)

C. Day, R. Gehring, K.-P. Jüngst, P. Komarek, H. Neumann, M. Noe, M. Süßer
Forschungszentrum Karlsruhe, Institut für Technische Physik (D)

U. Besserer, B. Bornschein, L. Dörr, M. Glugla, G. Hellriegel, O. Kazachenko, P. Schäfer, J. Wendel
Forschungszentrum Karlsruhe, Tritium Labor Karlsruhe (D)

M. Keilhauer, M. Neuberger, A. Weis
Forschungszentrum Karlsruhe, S-Bereich: Kfm. Projektabwicklung/Aufträge (D)

J. Angrik, J. Bonn, R. Carr, K. Essig, B. Flatt, C. Kraus, E.W. Otten, P. Schwinzer, D. Sevilla Sanchez
Universität Mainz, Institut für Physik (D)

H.W. Ortjohann, B. Ostrick, M. Prall, T. Thümmler, N.A. Titov, K. Valerius, C. Weinheimer
Universität Münster, Institut für Kernphysik (D)

G.R. Myneni
Jefferson Laboratory/Old Dominion*, Newport News (USA) (*Expertengruppe)

F. Sharipov
Universidade Federal do Parana*, (Brasilien) (*Expertengruppe)

E.V. Geraskin, O.V. Ivanov, V.M. Lobashev, S. Osipov, A. Skasyrskaya, V. Usanov, S.A. Zadorozhny
Academy of Sciences of Russia, INR Troitsk (RU)

O. Dragoun, J. Kašpar, A. Kovalík, M. Ryšavy, A. Špalek, D. Vénos, M. Zbořil
Czech Academy of Sciences, NPI, Řež / Prague (CZ)

T. Burritt, P.J. Doe, J. Formaggio, G. Harper, M. Howe, M. Leber, K. Rielage, R.G.H. Robertson, T. Van Wechel, J.F. Wilkerson
University of Washington, Seattle (USA)

M. Charlton, A.J. Davies, R. Lewis, H.H. Telle
University of Wales, Swansea (UK)

KATRIN time line

2001	first presentation, founding of KATRIN collaboration,
	LoI: *hep-ex/0109033* BMBF funding ‚Astroteilchenphysik‘
since 2002	background studies, R&D works, design optimisation
2003	pre-spectrometer manufacture, order for first large magnet group
2004	evaluation by HGF programme, Design Report 2004,
	orders for main spectrometer, WGTS & He-liquefier,…
2005	vacuum tests pre-spectrometer
2006	elmagn. tests pre-spectrometer, main spectrometer vacuum tests
2007	source demonstrator, inner electrode mounting
2008	commissioning of WGTS, tritium loops, em. tests of spectrometers
2009/10	system integration & first tritium runs
	regular data taking for 5-6 years (3fb years)

Summary

measure absolute
neutrino masses

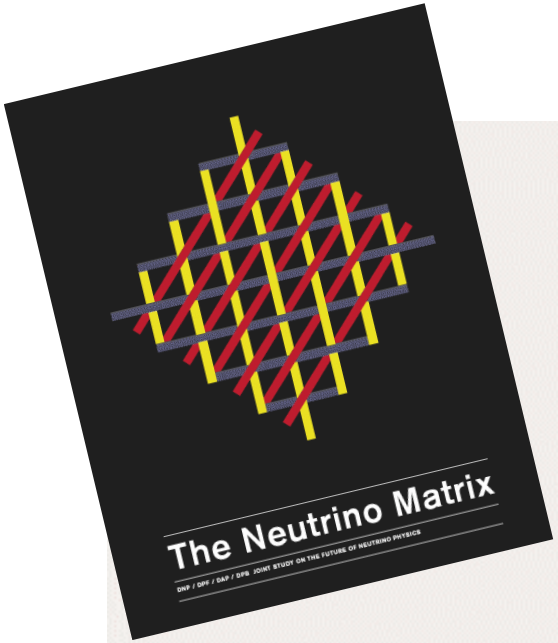

the growing excitement of
neutrino physics

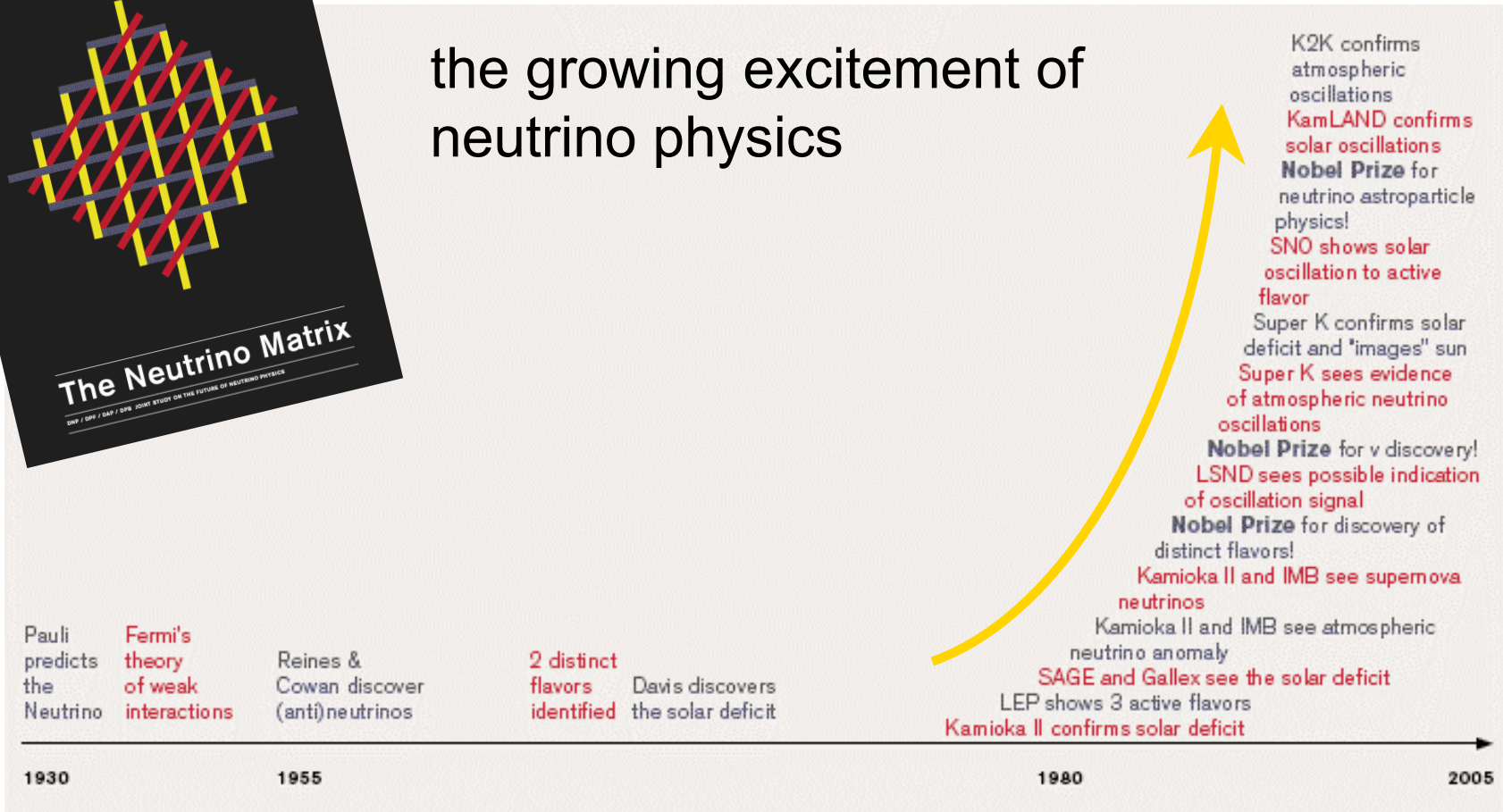

KATRIN only model-independent approach with sub-eV sensitivity